Bunker Rake SP05

BARONESS®
Maintenance Machines Series

Owner's operating manual Ver.1.0

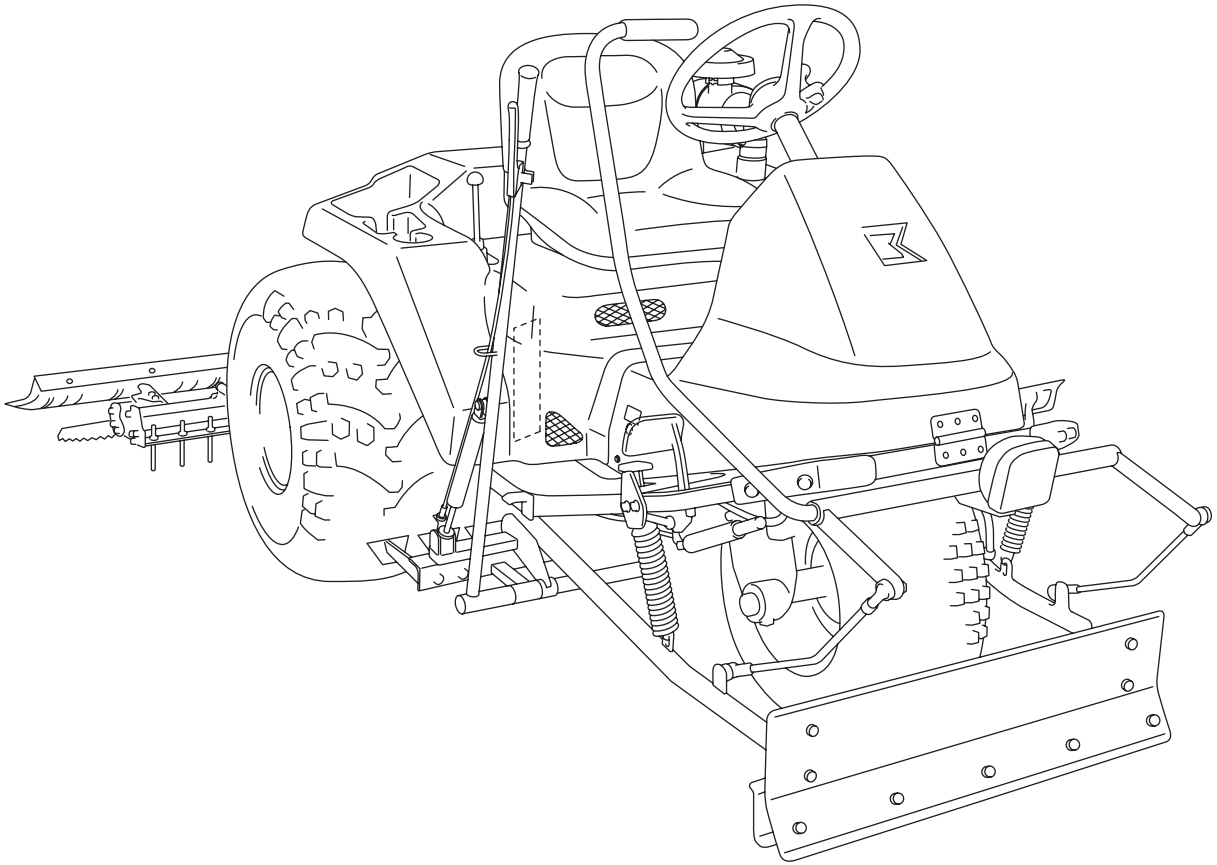

Read this manual and the owner's manual
before using this machine.

BARONESS®

Contents

Introduction....2
Introduction....2
Safety....2
Safety management....2
Intended uses....2
1. Training....3
2. Preparation....3
3. Precautions during operation....4
4. Maintenance and storage....4
Using the BARONESS bunker rake safely....5
Safety warnings....5
Precautions for safe operation....6
1. Warning General precautions....6
2. Warning Before operating the machine....6
3. Danger Warning Caution Inspection and maintenance before and after operating the machine....7
4. Warning When transporting the machine....8
5. Warning Caution When moving and taking the machine on or off a field....9
6. Warning When operating the machine....9
7. Danger Warning Caution After operating the machine and storage....10
Part names....12
Description of warning labels and operation labels....13
Features of SP05....14
Specifications....14
Handling instructions....15
1. Inspections and maintenance before use....15
1-1 Caution Checking and refilling of the engine oil....15
1-2 Cleaning of the air cleaner....15
1-3 Caution Checking of the hydraulic oil....15
1-4 Inspection of the hydraulic hose....16
1-5 Caution Inspection of the belt....16
1-6 Danger Inspection of the fuel....16
1-7 Inspection of the engine and its surroundings....16
1-8 Inspection of the tires....17
1-9 Warning Inspection of the brakes....17
1-10 Warning Inspection of the steering chain....17
1-11 Caution Oil cooler....17
1-12 Fastening of each part....17
2. Adjustments before use....18
2-1 Warning Adjustment of the seat position....18
2-2 Warning Adjustment of the steering wheel position....18
2-3 Adjustment of the rake....18
2-4 Adjustment of the blade....18
3. Starting and stopping the engine....19
3-1 Danger Warning Caution Starting the engine....19
3-2 Throttle lever....19
3-3 Stopping the engine....19
3-4 Caution Precautions when leaving the machine....19
3-5 Safety device....20
4. Travelling method....20
4-1 Caution Operation of the forward/reverse pedals....20
4-2 Bringing the machine to a stop....20
4-3 Caution Operation of the parking brake....20
4-4 Warning Caution Operation of the 2WD-3WD changeover lever....21
5. Machine operation methods....21
5-1 Caution Operation of the rake....21
5-2 Operation of the brush....22
5-3 Caution Operation of blade....22
5-4 Operation of the cultivator....23
5-5 Warning Headlight switch....23
5-6 Caution Cargo box....23
6. Maintenance....24
6-1 Caution Opening and closing the cover....24
6-2 Oiling of each part....24
6-3 Adjustment of the steering chain tension....24
6-4 Adjustment of the brake....25
6-5 Caution Adjustment of the belt tension....25
6-6 Finding the neutral position of the piston pump....26
6-7 Replacement of the fuel filter....26
6-8 Caution Replacement of the engine oil and the filter....26
6-9 Caution Replacement of the hydraulic oil and the cartridge filter....27
6-10 Inspection of parts for oil leaks....27
6-11 Warning Caution Replacement of fuses....28
6-12 Warning Inspection of the electric wiring....28
6-13 Danger Inspection of the battery....28
6-14 Caution Traction when the machine is unable to travel....29
6-15 Caution Maintenance schedule....29
7. Long-term storage....30
8. Disposal....30
9. Electric wiring diagram....31
10. Hydraulic circuit diagram....32. 33

Introduction

Thank you for purchasing a BARONESS SP05 Bunker Rake.
This manual describes the correct methods for handling, adjusting, and checking the machine.
Read this manual and make sure that you understand the content thoroughly before using the machine.
Our machines have been tested and inspected thoroughly before shipment from the factory. However, whether the machine demonstrates its original performance level depends on the manner in which it is handled, as well as the performance of daily checks, adjustments, and lubrication before and after operation. Keep the machine well maintained to ensure safe operation and excellent performance for an extended period of time.

Note

- Gradual changes may be made to the machine.
  When making inquiries about the machine, be sure to specify both the model type and serial number.
- Keep this Owner's Manual in the case behind the seat.
- The information described in this manual is subject to change without prior notice.

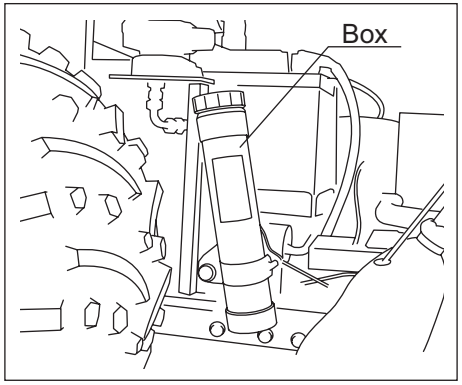

⚠Caution · · · · Warning labels and operation labels

- The warning labels that are attached to the machine and used in this Owner's Manual contain information required to maintain safety. Read the operating procedures and safety precautions carefully and only operate the machine after you understand them completely.
- The warning labels and their descriptions should be preserved in their entirety. If they are lost or damaged, please replace them immediately with new ones.
- Do not, under any circumstances, remove the warning labels that are attached to the machine.

Introduction

Read this manual carefully to ensure that you thoroughly understand how to properly operate and maintain this machine, and to avoid causing injury to yourself or others. The operator is responsible for operating the machine properly and safely.
Do not perform maintenance on the machine other than that described in this manual. Maintenance should only be performed by a certified specialist who fully understands the separately provided service manual.
If you have any questions concerning maintenance or genuine parts, please contact your local Baroness dealer. When making inquiries about this machine, please specify the machine's model number and serial number.

Safety

This machine met CEN standard EN 836:1997 (if the specified label is affixed) for ride-on bunker rakes at the time of production.
Improper use or maintenance may result in injury or death. To prevent an accident, be sure to follow the safety precautions described below and always pay attention to the warning symbols. The warning symbols are accompanied by the word CAUTION, WARNING, or DANGER, and all labels with these symbols describe important safety precautions. Failure to adequately follow these safety precautions may cause an accident resulting in injury or death.

Safety management

The following instructions are taken from CEN standard EN 836:1997, ISO standard 5395:1990, and ANSI B71.4-2004.

Intended uses

Do not use the machine for any purpose other than that for which it was intended; that is, as a bunker rake for use on golf courses. Any other use could be dangerous or damage the machine.

1. Training

- Read the Owner's operating Manual and other training material carefully. Be familiar with the controls and safety indications and learn how to stop the machine in an emergency.
- If the operator cannot understand the manual, it is the owner's responsibility to thoroughly explain the content of the Owner's operating Manual.
- Never allow children to operate or service the machine. Never allow adults that are unfamiliar with the instructions to operate or service the machine. Follow the age limit specified by your country or local government.
- Never operate the machine while people, especially children, or pets are nearby.
- Keep in mind that the owner, operator, and mechanic are responsible for preventing accidents, and accidents can be prevented with proper operational training.
- Never carry passengers.
- All operators and mechanics should receive proper training. The owner is responsible for ensuring that the operators receive training and the following must be thoroughly understood:
  - The basic safety precautions for operating a ride-on bunker rake.
  - Controlling the machine by applying the brake when it begins to slide on a slope is difficult. The main reasons why it may not be possible to control the machine on a slope are:
    - Insufficient tire grip
    - Driving too fast
    - Inadequate braking
    - The use of a model that is unsuitable for the job
    - Lack of awareness of the ground conditions (bumpy, icy, muddy), in particular, the angle of gradient

2. Preparation

- Use clothing and equipment that are suitable for the job. Wear a helmet, safety glasses, and ear protectors. Long hair, loose clothing, or jewelry can get tangled in moving parts. Do not operate the machine when barefoot or wearing sandals.
- Before starting, thoroughly check that the area where the machine is to be used is free of objects that can be thrown by the machine, such as rocks, toys, and wire.
- Do not operate the machine under the influence of alcohol or drugs.
- Warning: Fuel is highly flammable so make sure that you take the following precautions:
  - Store fuel in containers specifically designed for this purpose.
  - Refuel outdoors only and do not smoke while refueling.
  - Refuel before operating the machine. Do not remove the fuel tank cap while the engine is running or when the engine is hot.
  - If fuel is spilled, do not start the engine. Move the machine away from the area where the fuel was spilled and avoid creating any source of ignition until the spilled fuel has completely dissipated.
  - Close the fuel tank and fuel container cap securely.
- Repair any sensors that are malfunctioning before operating the machine.
- Check that the seat switch, safety switch, safety guards, and covers are installed correctly and that they function properly. Repair these parts if there is a malfunction before operating the machine.

3. Precautions during operation

- Do not start the engine in a closed space, there is the danger of carbon monoxide poisoning.
- Operate the machine during the day or in an area with sufficient lighting.
- Before starting the engine, set the parking brake.
- Remember that there is no such thing as a safe slope. Operating on grassy slopes requires particular care. To avoid overturning:
  - ●Do not stop or start suddenly on any slope.
  - ●Reduce speed when operating on a slope and when making sharp turns.
  - ●Always stay alert for bumps, hollows, and other hidden obstacles.
  - ●Never drive the machine across a slope unless the machine is designed to do so.
- Always keep a lookout for hidden hollows or obstacles.
- Watch out for other traffic when crossing or near a road.
- Do not operate the machine with damaged guards or with guards not installed properly.
- Do not change the engine governor setting or operate the engine at high speeds. Doing so could result in an accident causing injury or death, or a malfunction.
- Before leaving the operator's position:
  - ●Move the machine to a level surface.
  - ●Ensure the gearshift foot pedal is in neutral and set the parking brake.
  - ●Reduce the engine speed.
  - ●Stop the engine and remove the key.
- Stop the engine, and remove the key under the following conditions:
  - ●Before refueling
  - ●Before adjusting the rake and the blade
  - ●Before removing blockages
  - ●Before checking, cleaning, or servicing the machine
  - ●When experiencing an abnormal vibration while operating the machine
- When turning the engine off, close the throttle and then close the fuel valve if your model is equipped with one.
- Before backing up, look down and behind you to check that the path is clear and that you can back up safely. Have someone guide you if it is difficult to check the area behind you.
- Reduce speed when turning or crossing roads or sidewalks, and pay close attention to your surroundings when proceeding.
- Take care when loading or unloading the machine onto a trailer or truck.
- Use care when approaching blind corners, shrubs, trees, or other objects that may obscure your vision.

4. Maintenance and storage

- Check that all nuts, bolts, and screws are properly tightened to ensure that the machine is always operated under safe conditions.
- Empty the fuel tank and keep the machine away from ignition sources when storing the machine in a building where sparks and open flames are used.
- Let the engine cool down before storing the machine in a closed space.
- To prevent a fire, keep the engine, muffler, and battery areas free of excessive grease, grass, leaves, and dust.
- Keep all parts of the machine in good working condition and all fasteners and hydraulic fittings tightened.
- If the fuel tank needs to be cleaned, clean it outdoors.
- Take care that your fingers do not get crushed while making adjustments to the machine.
- Before servicing or adjusting the machine, bring it to a stop, set the parking brake, turn the engine off, and remove the key (for gasoline engines, disconnect the spark plug lead as well). Be sure to check that each part has completely stopped operating before servicing or adjusting the machine.
- To prevent a fire, keep areas around the drives, exhaust pipes, mufflers, and engine free of excessive grease, grass, leaves, and dust. Clean up any spilled oil or fuel.
- When necessary, use a jack to securely support the machine.
- Take care when removing equipment that may have pressure such as that from a spring applied to it.
- When servicing the machine, disconnect the battery and the spark plug lead. To disconnect the battery, disconnect the negative battery cable first and then the positive battery cable. To connect the battery, connect the positive battery cable first.
- Keep hands and feet away from moving parts. If possible, avoid making any adjustments while the engine is running.

■ Charge the battery in a well ventilated area, away from sparks and flames. Unplug the battery charger before connecting it to the battery. Also, wear protective clothing and use insulated tools.
■ Before storing the machine, lower the rake.

Using the Baroness bunker rake safely

The following precautions should always be followed to ensure the safe operation of the Baroness machine.

Safety warnings

Warning symbols ⚠ have been attached to this machine to ensure that you can operate it safely.
The warning symbols indicate items which are particularly important for your safety. It is important to always follow the warnings and operate the machine safely.

Warning symbols

⚠Danger This symbol indicates that serious injury or death will occur if the warning is ignored.

⚠Warning This symbol indicates that serious injury or death may occur if the warning is ignored.

⚠Caution This symbol indicates that injury or damage to property may occur if the warning is ignored.

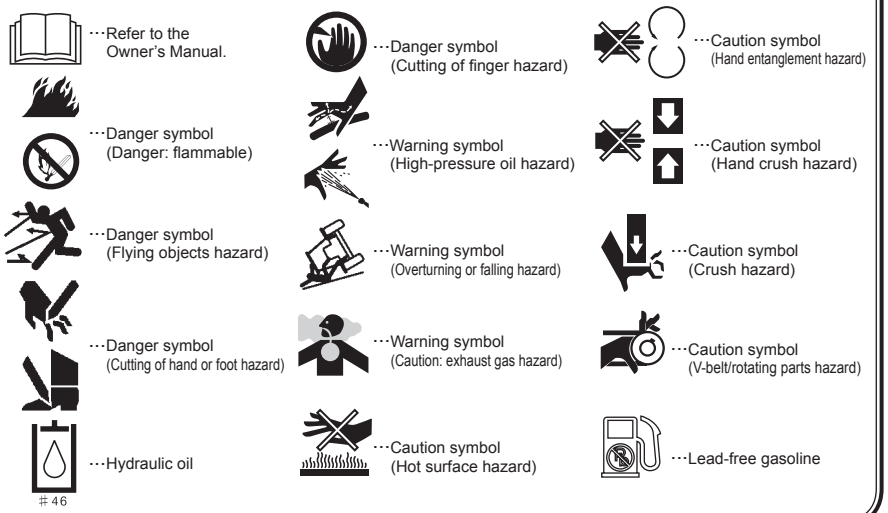

Precautions for safe operation.

- ●The precautions that are described here are important for safety. Be sure to follow them.
- ●Failure to follow these precautions may cause injury or death, or damage to the machine.

* The information described in this manual may differ from the actual machine you have purchased.

1. General precautions

⚠Warning

■Do not operate the machine under the following conditions!

- ●If you are suffering from fatigue or illness, or if you are under the influence of any drugs or alcohol.
- ●If pregnant
- ●Under the age of 18

* Failure to observe these precautions may cause an unexpected accident.

■Wear suitable clothes when operating the machine.

Do not wear a towel around your head or waist, or a scarf around your neck. Wear safety glasses, a helmet, and slip resistant shoes. Use protective gear suitable for the working conditions and do not wear loose-fitting clothes.

* Failure to observe this precaution may cause you to become entangled in the machine or to slip and fall.

■When lending the machine to others

Thoroughly explain the operating procedures and have them read the Owner's Manual before use.

* Failure to follow this precaution may cause an accident, resulting in severe injury or death, or damage to the machine.

2. Before operating the machine

⚠Warning

■Do not carry passengers.

This machine can carry only one person.

* Failure to follow this precaution may cause an unexpected accident.

■Before starting the engine

Before starting the engine, sit in the operator's seat, check the position of the seat, and check the safety of your surroundings.

* Failure to follow this precaution may cause an unexpected accident.

■Do not drive or operate the machine at night.

Do not drive or operate the machine at night or in poor visibility.

* Failure to follow this precaution may cause an unexpected accident.

⚠Caution

■Warm the engine on cold days.

Be sure to warm the engine on cold days.

* Failure to follow this precaution may result in the machine being unable to demonstrate its full performance capability.

■Take precautions with the hot muffler/exhaust pipe.

Do not touch the muffler/exhaust pipe while operating the machine or just after the engine has been turned off since it will be hot.

* Failure to follow this precaution may cause burns.

■Do not modify the machine.

Do not modify the machine.

* Failure to follow this precaution may cause an accident or injury, or the machine to malfunction.

■Inspection and maintenance

Be sure to perform checks and maintenance before and after operating the machine.

* Failure to follow this precaution may cause an accident or injury, or the machine to malfunction.

■Performing periodic checks and maintenance

Perform periodic checks and maintenance every year, and maintain each part. Be sure to change the power steering hose every two years and to check the electrical wires every year.

* Failure to follow this precaution may cause an accident or the machine to malfunction due to improper maintenance.

3. Inspection and maintenance before and after operating the machine

■Add oil and refuel when the engine is cool.

Do not add oil or refuel when the engine is running or if the engine is hot.

* Failure to follow this precaution may cause the fuel to ignite, resulting in a fire.

■Fire is strictly prohibited when refueling.

Do not smoke or use open flames when refueling.

* Failure to follow this precaution may cause the fuel to ignite, resulting in a fire.

■Check for fuel leaks.

If the fuel pipe is damaged, check it for fuel leaks.

* Failure to follow this precaution may cause fuel to ignite, resulting in a fire.

■Close the fuel cap and clean up any spilt fuel.

After refueling, be sure to securely close the fuel cap and thoroughly clean up any spilt fuel.

* Failure to follow this precaution may cause a fire.

■Fire is strictly prohibited when checking the battery.

The use of fire is strictly prohibited when checking or charging the battery.

* Failure to follow this precaution may cause the battery to ignite and explode, which may result in burns.

■Do not allow electrolyte to come into contact with your skin.

Do not allow electrolyte to come into contact with your skin or your clothes. Should your skin or clothes come into contact with electrolyte, immediately wash the affected area with water.

* Failure to follow this precaution may cause burns or damage to your clothes.

■Follow the correct procedure when installing and removing the battery.

To install the battery, connect the positive (+) battery cable first. To remove the battery, disconnect the negative (-) battery cable first.

* Failure to follow this precaution may cause a short circuit, which may result in burns and a fire.

■Clean the engine and the oil cooler.

Be sure to clean the engine and the oil cooler after you have finished operating the machine.

* Failure to follow this precaution may cause overheating or seizure of the engine. It can also cause failure of the hydraulic equipment.

■Perform inspections and maintenance on a flat and stable surface.

For inspections and maintenance, bring the machine to a stop on a flat, stable area that is free from traffic to ensure that the machine will not overturn or move, then lower the attachments.

* Failure to follow this precaution may cause the machine to overturn and cause an unexpected accident.

■Remove debris from the muffler and engine.

Check that there is no grass, debris, or fuel around the muffler and engine or on the brakes every day before operating the machine.

* Failure to follow this precaution may cause a fire.

■Do not allow the air pressure in the tires to exceed the specified maximum.

When filling the tires with air, do not allow the air pressure in the tires to exceed the specified maximum.

* Failure to follow this precaution may cause the tires to explode and cause an injury.

■Be sure to check the electrical components and wires.

Check whether the electrical wires are touching other parts, if their covers have come off, or if the connectors are loose every day before operating the machine.

* Failure to follow this precaution may cause a short circuit, which may result in a fire.

■Do not allow the electrolyte to fall below the “LOWER” limit.

Make sure that the electrolyte is between the “UPPER” and “LOWER” level marks and that it does not fall below the “LOWER” level mark.

* Failure to follow this precaution may result in the pole connector in the container being exposed if the electrolyte falls below the “LOWER” level mark. This may cause sparks to be produced when the engine is started and the gas in the container to ignite, resulting in an explosion.

■Take sufficient precautions with exhaust gas.

Do not start the engine in an enclosed area. Start the engine outdoors in an area with sufficient air circulation. If you have to start the engine indoors, make sure there is sufficient ventilation.

* Failure to follow this precaution may cause exhaust-gas poisoning, which may result in death.

■Be sure to check the parking brake.

Check that the brake operation is not faulty and that the parking brake is not noticeably loose and does not have noticeable play.

* Failure to follow this precaution may cause an accident.

■Take precautions with high-pressure oil.

Always check whether the fittings and hoses are loose or damaged. Before disconnecting the fittings and hoses, release the pressure in the hydraulic circuit.

* Failure to follow this precaution may cause the high-pressure oil to pierce your skin, resulting in an injury.

⚠Caution

■Turn the engine off during inspections and maintenance.

Be sure to turn the engine off while inspecting, servicing, repairing, or cleaning the machine.

* Failure to follow this precaution may cause you to become pinned under the machine, resulting in personal injury.

■Be sure to replace the covers.

Be sure to replace any covers that were removed during an inspection or maintenance.

* Failure to follow this precaution may cause you to become entangled in the machine, resulting in personal injury.

■Allow hot parts to cool sufficiently before inspection and maintenance.

Allow parts that become hot such as the muffler and engine to cool sufficiently before performing an inspection or maintenance.

* Failure to follow this precaution may cause burns.

■Correctly use the proper tools for the job.

Properly manage and correctly use the proper tools necessary for inspections and maintenance.

* Failure to follow this precaution may cause an accident due to improper maintenance.

4. When transporting the machine

⚠Warning

■Do not operate quick start and stop on a running board.

Take sufficient precautions when operating the machine on a slope or a running board.

* Failure to follow this precaution may cause an accident such as the machine falling or overturning.

■Use a running board with sufficient strength, length, and width.

When loading or unloading the machine onto a truck, be sure to turn the engine of the truck off on a flat surface that is free from traffic, set the parking brake to avoid inadvertent movement, and chock the wheels. The running board should be non-skid and be of sufficient strength, length, and width to support the machine.

* Failure to follow these precautions may cause an accident such as the machine falling or overturning.

■Move the machine forward when loading it and backward when unloading it.

When loading the machine onto a truck, move it forward, and when unloading the machine, move it backward.

* Failure to follow this precaution may cause the machine to lose balance, resulting in an accident such as the machine falling or overturning.

■Securely fasten the machine to the truck with a rope or straps.

When transporting the machine on a truck, set the parking brake and fasten the machine to the truck with a rope, straps, tie downs, or other suitable restraining device that has sufficient strength.

* Failure to follow this precaution may cause the machine to fall from the truck bed, resulting in an accident.

5. When operating the machine and entering or leaving a field

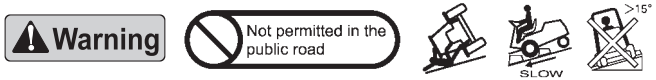

■Do not operate the machine on public roads.
This machine is not authorized for operation as a special motor vehicle. Do not operate it on public roads.
* Failure to follow this precaution is subject to punishment for violating the traffic laws.

■Check the safety of your surroundings and accelerate slowly.
Start the engine after checking the safety of your surroundings. Accelerate slowly, and do not start quickly.
* Failure to follow this precaution may cause personal injury.

■Pay attention to the road shoulders.
On roads with ditches or on roads where both sides are inclined, pay sufficient attention to the road shoulders.
* Failure to follow this precaution may cause the machine to fall.

■Do not start, stop, or turn the machine suddenly, or operate it at excessive speeds.
Start and stop the machine slowly. When turning, make sure you reduce your speed sufficiently. Also, reduce your speed sufficiently when operating on slopes, bumpy roads, or curves.
* Failure to follow this precaution may cause the machine to overturn or fall, resulting in damage to the machine.

■Use a running board to cross ditches.
When entering a field, crossing ditches, or traveling over a soft area, be sure to use a running board. Use a non-skid running board of sufficient strength, length, and width to support the machine.
* Failure to follow this precaution may cause the machine to slip or overturn, resulting in an accident.

■Set the parking brake while warming the engine.
* Failure to follow this precaution may cause the machine to spontaneously move and cause an accident.

■When operating the machine at high speeds, do not operate the brake pedal suddenly.
* Failure to follow this precaution may cause the machine to overturn or fall.

6. When operating the machine

■When operating this machine be cautious of your surroundings.
Look out for objects that can ricochet or possibly be projected from the machine while in use.
* Failure to follow this precaution may cause personal injury, injury to others, and/or damage the machine.

■Do not substitute people or cargo for weight.
Do not load people or cargo on the machine as a substitute for weight.
* Failure to follow this precaution may cause an injury.

■Wear protective gear.
Be sure to wear safety glasses, a helmet, and slip resistant shoes.
* Failure to follow this precaution may cause an injury.

■Do not crawl under or place your feet under the machine while it is in operation.
Do not crawl under or place your feet under the machine while it is in operation.
* Failure to follow this precaution may cause personal injury if the machine is lowered while it is in operation.

■Before operating the machine, remove obstacles such as rocks from the field.
* Failure to follow this precaution may cause an accident or injury, or the machine to malfunction.

■Do not start, stop, or turn the machine suddenly, or operate at excessive speeds.
Start and stop the machine slowly. When turning, make sure you reduce your speed sufficiently.
* Failure to follow this precaution may cause the machine to overturn or fall, resulting in damage to the machine.

■Exercise extreme caution when operating or working on a slope.

The balance of the machine worsens on slopes and bumps. Be sure to reduce your speed sufficiently and to operate the machine and work slowly.

* Failure to follow this precaution may cause the machine to overturn or fall, resulting in damage to the machine.

■Do not operate the machine near or around people.

Do not operate the machine when children, golfers, or other adults are present.

* Failure to follow this precaution may cause personal injury or injury to others.

■Inspect the machine and perform maintenance immediately if an unusual vibration occurs.

If an unusual vibration occurs, stop the engine immediately, inspect the machine and try to identify the cause. Make repairs if necessary.

* Failure to follow this precaution may cause an accident or injury, or the machine to malfunction.

■Do not take your eyes off the road ahead. Do not operate the machine with no hands.

* Failure to follow this precaution may cause personal injury or material damage.

■When leaving the machine

Stop the machine on a flat, stable surface, turn the engine off, set the parking brake, lower the rake, and then remove key from ignition switch.

* Failure to follow this precaution may cause the machine to spontaneously move and cause an accident.

■Do not carry passengers.

This machine can carry only one person.

* Failure to follow this precaution may cause an unexpected accident.

■Precautions for operating on slopes

● When operating on a slope, the ground may be uneven and there may be bumps and rocks. As these may cause the machine to suddenly tilt, never operate the machine on a slope of 15 degrees or more.

7. After operating the machine and when storing the machine

■Add oil and refuel when the engine is cool.

Do not add oil or refuel when the engine is running or if the engine is hot.

* Failure to follow this precaution may cause the fuel to ignite, resulting in a fire.

■Do not open the radiator cap when the radiator is hot.

When the radiator is hot, do not open the radiator cap.

* Failure to follow this precaution may cause scalding water to be expelled, which may result in burns.

■Cover the machine with a sheet after it has sufficiently cooled down.

Only cover the machine with a sheet after the muffler and engine have sufficiently cooled down.

* Failure to follow this precaution may cause a fire.

■Install and remove the battery by following the correct procedure.

To install the battery, connect the positive (+) battery cable first. To remove the battery, disconnect the negative (-) battery cable first.

* Failure to follow this precaution may cause a short circuit, which may cause burns and a fire.

■Perform inspections and maintenance on a flat, stable surface.

For inspections and maintenance, bring the machine to a stop on a flat, stable surface to ensure that the machine will not overturn or move and then lower the rake.

* Failure to follow this precaution may cause the machine to overturn and cause an unexpected accident.

■Remove debris from the muffler and engine.

Check that there is no grass, debris, or fuel around the muffler and engine or on the brakes every day before operating the machine.

* Failure to follow this precaution may cause the fuel to ignite, resulting in a fire.

■Be sure to check the electrical components and wires.

Check whether the electrical wires are touching other parts, if their covers have come off, or if the connectors are loose every day before operating the machine.

* Failure to follow this precaution may cause a short circuit, which may result in a fire.

■When storing the machine for an extended period of time, remove the battery cables and the ignition key.

If the machine is going to be stored and not used for an extended period of time, remove the negative battery cable and the ignition key.

* Failure to follow this precaution may cause an accident.

■Take precautions with high pressure hydraulic oil.

Always check whether the fittings and hoses are loose or damaged. Before disconnecting the fittings and hoses, release the pressure in the hydraulic circuit.

* Failure to follow this precaution may cause the high-pressure hydraulic oil to pierce your skin, resulting in an injury.

■Turn the engine off during inspections and maintenance.

Be sure to turn the engine off while inspecting, servicing, repairing, or cleaning the machine.

* Failure to follow this precaution may cause you to become pinned under the machine, resulting in personal injury.

■Be sure to replace the covers.

Be sure to replace any covers that were removed during an inspection or maintenance.

* Failure to follow this precaution may cause you to become entangled in the machine, resulting in personal injury.

■Allow hot parts to cool sufficiently before an inspection or maintenance.

Allow parts that become hot such as the muffler and engine to cool sufficiently before performing an inspection or maintenance.

* Failure to follow this precaution may cause burns.

- Regularly have the engine speed tested at a Baroness dealer to check the engine for safety and accuracy.
- Consult a Baroness dealer when major repairs or assistance is required.
- For safety and maximum performance, use genuine Baroness parts and accessories. Note that the Baroness product warranty may not apply if parts or accessories from other companies are used.
- Do not use this machine if it has been modified.

■Sound pressure level

This machine was confirmed to have a continuous A-weighted sound pressure level of 89 dB (A) by measuring identical machines in accordance with the procedure specified in directive 98/37/EC and its amendments.

■Sound power level

This machine was confirmed to have a sound power level of 105 dBA/l pW by measuring identical machines in accordance with the procedure specified in directive 2004/14/EC.

■Vibration level

- Hand-arm vibration -

This machine was confirmed to transmit a maximum vibration level of less than 2.5 m/s^2 to hands and arms by measuring identical machines in accordance with the procedure specified in ISO 5349.

- Whole body vibration -

This machine was confirmed to transmit a maximum vibration level of less than 0.5 m/s^2 to the whole body by measuring identical machines in accordance with the procedure specified in ISO 2631.

Part names

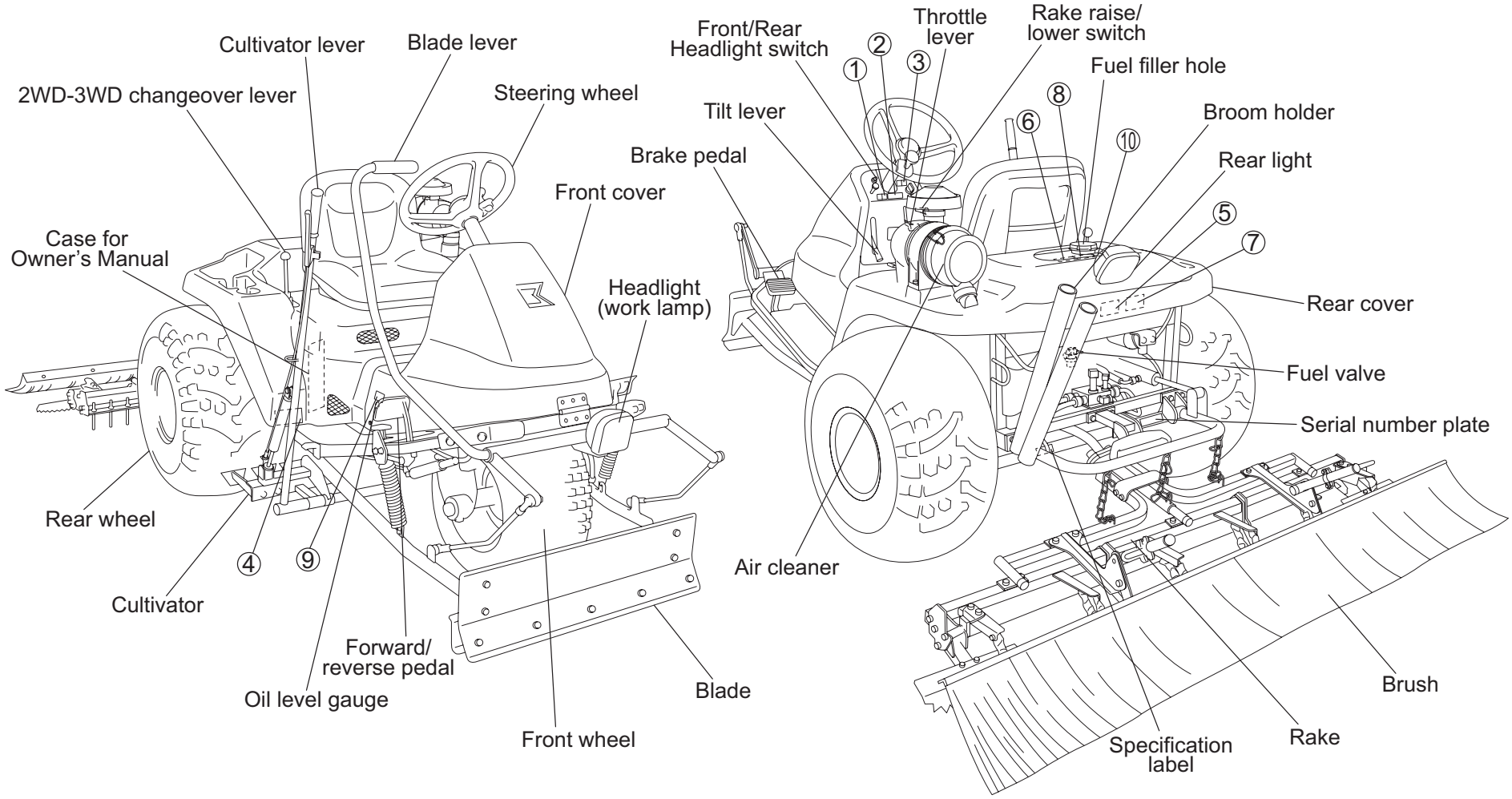

* 1: Serial number plate

KYOEISHA CO.,LTD
HEAD OFFICE
1-26,MIYUKI-CHO
TOYOKAWA,AICHI-PREF.
442-8530 JAPAN.

MADE IN JAPAN

MODEL	
SERIAL NO.	

* 2: Specification label

BARONESS BUNKER RAKE

CE

SPECIFICATIONS	
MODEL	SP05
TOTAL WEIGHT	480 kg

KYOEISHA CO.,LTD

* Please refer to the following page for the details of the warning labels and operation labels of ① to ⑩.

Description of warning labels and operation labels

●Attach the warning labels and operation labels in close proximity to the dangerous parts to which they apply, making sure that they are clearly visible. If a label is damaged or peels off, replace it with a new one.

①

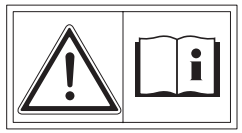

Warning : Read the Owner's Manual.

②

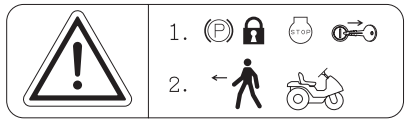

Warning : Leave the machine after setting the parking brake, turning the engine off, and removing the ignition key.

③

Warning : Failure to observe the maximum inclination angle may result in the machine overturning.

④

Caution : Hand crush hazard
- Your hand may get crushed.

⑤

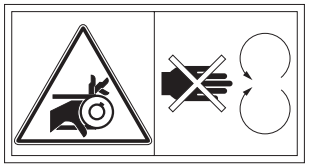

Danger : Rotating parts hazard
- Keep hands away from the belt while the engine is running.

⑥

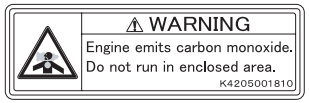

Warning : Exhaust gas hazard

⑦

Caution : Hot surface hazard (muffler)

⑧

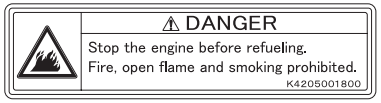

Danger : Fire, open flame and smoking prohibited.

⑨

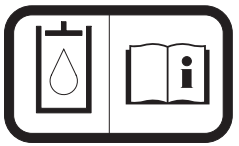

Hydraulic oil mark

⑩

Lead-free gasoline label

Features of SP05

- ●As this machine has power steering, less arm fatigue is experienced when operating it.
  Power steering also enables you to work more efficiently since the machine can travel faster and requires only a small turn radius.
- ●You can operate the machine stably on slopes since it has a low center of gravity.
- ●You can operate the machine comfortably as it offers low vibration, low noise and smooth travelling.
- ●You can operate the machine without difficulty since the machine's rear wheels have a large diameter and excellent grip on sand.
- ●Maintenance of the machine can be easily performed since the cover can be fully opened.

Specifications

Model		SP05 (3WD)
Dimensions	Total length	215 cm (with blade 230 cm (84.65 in (with blade 90.55 in))
	Total width	190cm (74.8 in)
	Total height	120cm (47.24 in)
	Wheelbase	1050cm (413.39 in)
	Tread	1070cm (421.26 in)
Total weight (with rake)		457kg (1007.51 lb)
Speed	Three-wheel drive	0-12.8km/h (0-7.95 mph)
Wheels	Front wheel	PD21 × 11.00 - 10
	Rear wheels	25 × 13.00 - 9
Engine	Model	VANGUARD: 356447 Type: 0275-G1 (13 kw(18 PS)/3600 rpm)
	Type	V2 cylinder
	Displacement	0.57 L(570 cc)
	Rotation speed	1,400 to 3,000 rpm (without load)
	Maximum power	11 kw(15 PS)/3000 rpm
Fuel type		Lead-free automotive gasoline
Fuel tank capacity		15 L
Hydraulic tank capacity		15 L
Operating width	Rake	190cm (74.8 in)
	Blade (option)	80 cm (Mass: 27 kg) (31.5 in (Mass: 59.52 lb))
	Cultivator (option)	116 cm (Mass: 19 kg) (45.67 in (Mass: 41.89 lbs))
	Finishing brush (option)	195 cm (Mass: 10.6 kg) (76.77 in (Mass: 23.37 lbs))

Handling instructions

1. Inspections and maintenance before use

⚠Caution ●Be sure to check the following areas before starting the engine.

1-1 Checking and refilling of the engine oil

For more details, refer to the owner's manual for the engine.

- Make sure that the engine is level, then check the oil level by fully inserting the dipstick. If the oil level indicated on the dipstick is between the upper and lower limits, there is a sufficient quantity of oil.
- If the oil level is low, add engine oil, and if the oil is dirty, exchange the oil (refer to 6-8).
- After the engine has been turned off, wait 10 to 20 minutes before checking the oil level. Please note that adding too much oil may cause engine failure, which may result in an accident.
- Refill the engine oil from the oil filler hole.
- It takes some time for the added engine oil to drain down to the oil pan.
- Inspect the oil level again about 10 to 20 minutes after adding the engine oil.

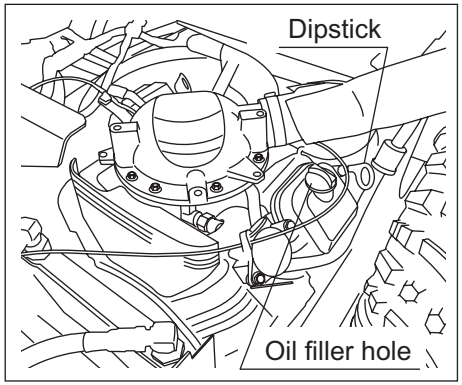

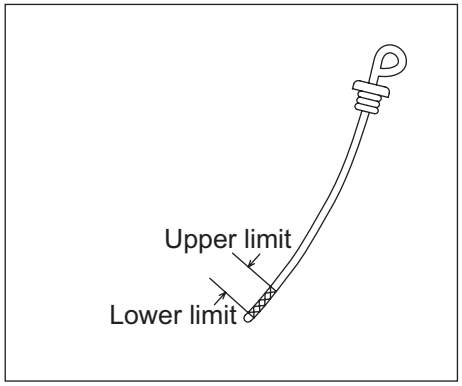

* Never mix different kinds of engine oil under any circumstances.

* Use an engine oil that meets or exceeds API Service Classification CD, and an SAE viscosity suited to the operating environment (temperature).

1-2 Cleaning of the air filter

- A dirty air filter element will cause the engine to malfunction. When the element is dirty, clean it by carefully tapping the element or blowing air through it from the inside so as not to damage the element.
- Replace the air cleaner element every 200 hours.

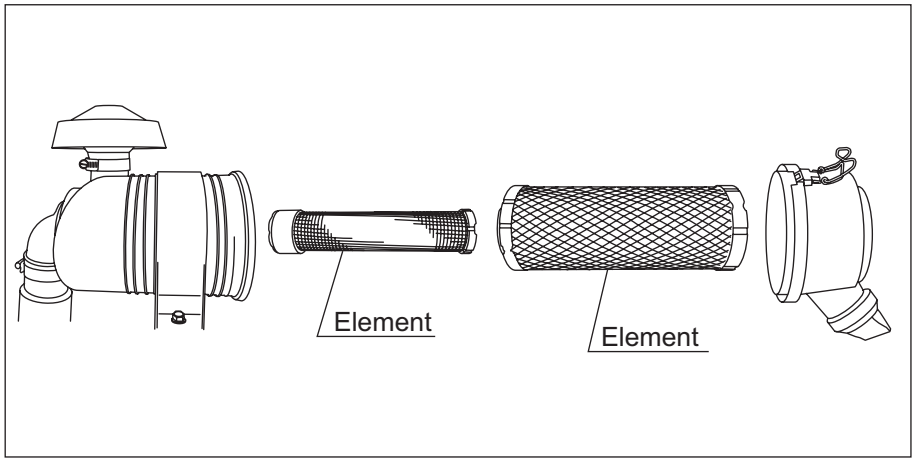

1-3 Checking of the hydraulic oil

- Park the machine on a level area to check whether the hydraulic oil level is at the center of the oil level gauge. If the level is low, refill the hydraulic oil tank with Shell Tellus 46 hydraulic oil or equivalent.
- Inspect the underside of the machine to make sure that no oil is leaking.

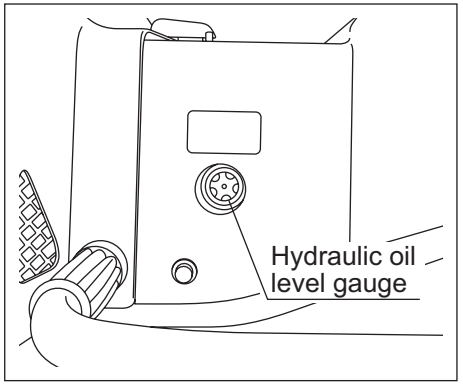

* Never mix different kinds of hydraulic oil under any circumstances.

⚠Caution

- Drain and replace the hydraulic oil immediately if you notice that it is emulsifying or that there is a lack of transparency (refer to 6-9).

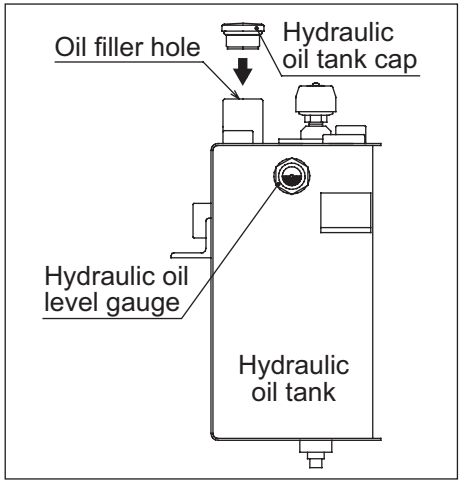

1-4 Inspection of the hydraulic hose

Check whether the hydraulic hose is damaged. If it is, replace it immediately.

1-5 Inspection of the belt

⚠Caution

- Be sure to stop the engine before inspecting the belt.
- Please note that the belt may rotate mistakenly even after the engine has stopped so you may still become entangled in the belt.

⚠Caution

- The muffler of the engine is located near the belt. Make sure that the muffler has cooled sufficiently before inspecting the belt.

- Hold the center of the belt between your fingers to check whether the belt is at an appropriate tension. If it is loose, follow the steps described in "6-9 Adjustment of the belt tension."
- Check whether the belt is cracked, damaged, unusually worn, or otherwise in need of replacement.

1-6 Inspection of the fuel

⚠Danger Precautions for the handling of fuel

- Fuel is highly flammable. Extinguish all naked flames and cigarettes.
- Never fill the fuel tank indoors, while engine is running, or while the engine is still hot.
- In order to prevent a fire, always keep the engine clean and be sure to remove debris, grease, and oil deposits.
- Clean up spilled fuel thoroughly.
- The fuel tank has a capacity of 15 L. Make sure that the fuel level does not exceed "F" of the fuel gauge.

- If there is insufficient fuel in the tank, refill it with lead-free gasoline.

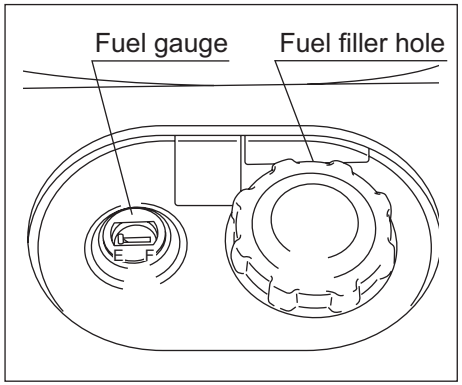

1-7 Inspection of the engine and its surroundings

Refer to the owner's manual for the engine for a description of how to handle the engine.

1) Check whether the fuel system parts are cracked or leaking, and replace them with new parts if necessary.
2) If grass, leaves, or similar inflammable materials have built up inside or around the muffler and exhaust pipe, clean the parts by blowing air through them.

1-8 Inspection of the tires

● Check the tire pressure, and inspect the tires for cracks, damage, and unusual wear.

	Tire pressure	
	kPa	(kgf/cm^2)
Front wheel	70	(0.7)
Rear wheel	40	(0.4)

1-9 Inspection of the brakes

⚠Warning

- Make sure that the brake wires are not cracked or damaged.
- Make sure that the parking brake works on a slope and that the brake does not make any noise when it is released. If you notice any irregularities with regard to the performance of the brakes, adjust the brake wires (refer to 6-4) and inspect the parking brake.

1-10 Inspection of the steering chain

⚠Warning

- Open the front cover to check whether the steering chain is loose (refer to 6-3) or damaged.

1-11 Oil cooler

Be sure to clean off any dust that adheres to the oil cooler. If you operate the machine in a dusty area, clean the oil cooler more frequently than usual.

⚠Caution

- Failure to clean the oil cooler will cause the hydraulic equipment to fail.

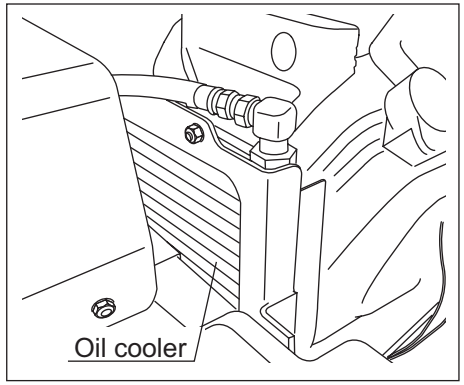

1-12 Fastening of each part

● Bolts and nuts may be loosened after repeated use of the machine. Be sure to inspect and retighten them by the specified torque.

- Tighten the following bolts and nuts by the following specified torques.

Part	Code No.	Part name	Quantity	Appropriate tightening torque		Remarks
				N · m	(kgf · cm)	
3WD front wheel	K0014120602	12 heat-treated bolt 60P1.5	4	67-85	(670-850)	
	K0014120452	12 heat-treated bolt 50P1.5	4	67-85	(670-850)	
	K0160000492	24 Special nut P1.5	1	180-200	(1800-2000)	
Front wheel arm	K0013100502	10 heat-treated bolt 50	1	29-38	(290-380)	
Rear wheel	K0034120302	12 heat-treated 8T bolt 30P1.5	4	67-85	(670-850)	
	K0160000492	24 Special nut P1.5	2	180-200	(1800-2000)	

- Tighten other bolts and nuts by the following specified torques.

Nominal diameter	Appropriate tightening torque [Normal bolt Hardness classification 4.8]		Nominal diameter	Appropriate tightening torque [Heat-treated bolt Hardness classification 10.9]	
	N · m	(kgf · cm)		N · m	(kgf · cm)
M5	3-5	(30-50)	M6	14-18	(140-180)
M6	7-9	(70-90)	M8	28-38	(280-380)
M8	14-19	(140-190)	M10	58-76	(580-760)
M10	29-38	(290-380)	M12	104-134	(1040-1340)
M12	52-67	(520-670)	M14	140-188	(1400-1880)
M14	70-94	(700-940)	M16	210-260	(2100-2600)

2. Adjustments before use

2-1 Adjustment of the seat position

- You can slide the seat forward and backward by pulling the seat lever in the direction indicated by the arrows. Adjust the seat position to one that is appropriate for the operation to be performed.

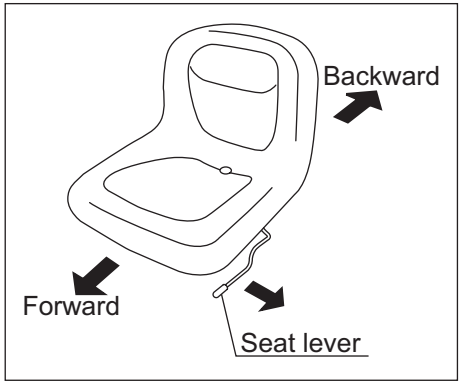

Warning Do not adjust the seat position while the machine is travelling, it is dangerous to do so.

2-2 Adjustment of the steering wheel position

- The steering wheel position can be adjusted.
- Lift the tilt lever to release the steering wheel lock. When the steering wheel is set in a position appropriate for the operation to be performed, pull the lever back down to lock the steering wheel in place.

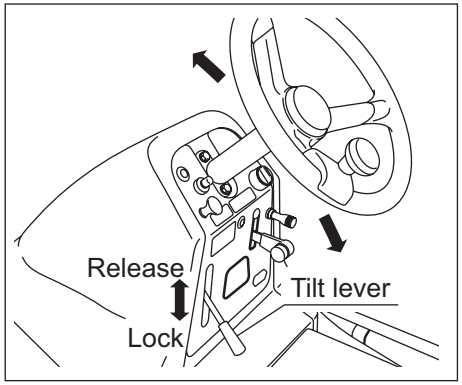

Warning Do not adjust the steering wheel position while the machine is travelling, it is dangerous to do so.
Lock the steering wheel securely in place. It is extremely dangerous to travel with it unlocked.

2-3 Adjustment of the rake

- Before use, check the degree of wear that the fork blade and the warp board have undergone and whether the bolts and nuts have been loosened. Adjust the rake by performing the following steps and then smooth the bunker to a beautiful finish.

● Basic adjustment method

1. Lower the rake in a flat area and move the machine about 20 cm forward.
2. Place a wooden board with a thickness of about 15 mm under the warp board.
3. Adjust the position of the fork so that the rake load is applied to the wooden board and the fork blades are lightly touching the ground, and then lock it in place with the nut.

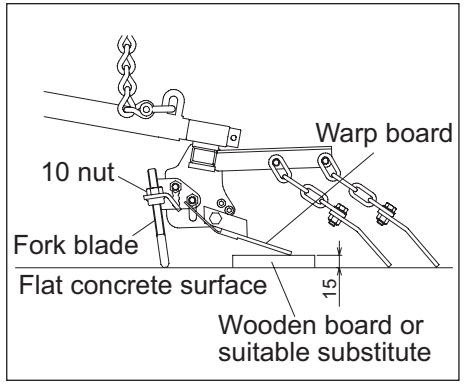

2-4 Adjustment of the blade

- Loosen the bolt and set the small blade in place. Set it in direction A to carry a thin layer from the surface of the sand and in direction B to carry a thicker layer from the surface of the sand.
- You can remove the blade by performing the following steps.
  ① Remove the pin.
  ② Remove the blade.

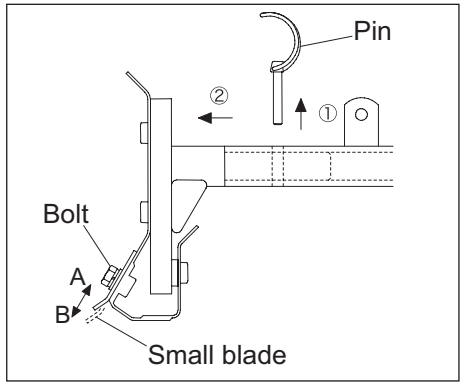

3. Starting and stopping the engine

3-1 Starting the engine

● Before starting the engine

⚠Danger

- Inspect the area where the machine will be used.
- Never operate the engine in a building without proper ventilation.
- Inspect whether there is any damage to the engine and make sure that the cover and guard are securely fastened in place.

● Safety requirements for starting the engine

A safety device on this machine prevents the engine from starting unless the following requirements are met:

a. Someone is sitting on the seat.
b. The parking brake is engaged.
c. The forward and reverse pedals are in neutral.

● Engine starting method

⚠Warning

- Before starting the engine, make sure that the forward and reverse pedals are in neutral and that your foot is not on either of them. Operating these pedals when starting the engine could result in the machine starting suddenly.

⚠Caution

- Do not place your foot on either the forward or the reverse pedal when starting the engine.
- The starter should only be engaged for a maximum of 15 seconds. If the engine fails to start, another attempt to start the engine should not be made for 30 to 60 seconds so as to avoid draining the battery.

① Sit in the seat.
② Make sure that the parking brake is engaged. (The safety device prevents the engine from starting if the parking brake is not engaged.)
③ Make sure that the forward and reverse pedals are in neutral.
④ Open the fuel valve under the fuel tank.
⑤ Pull the choke knob out. (Continue to pull the choke knob out until the engine starts. If released, the choke knob will return to its original position.)
⑥ Set the throttle lever to a position slightly above the Low Speed position.
⑦ Insert the key and turn it clockwise. (Turn it to Start to start the engine.)
⑧ After starting the engine, push the choke knob back slowly.
⑨ Warm the engine at a low-speed for about 5 minutes without applying a load to the engine.
⑩ Move the throttle lever up slowly to the High Speed position.

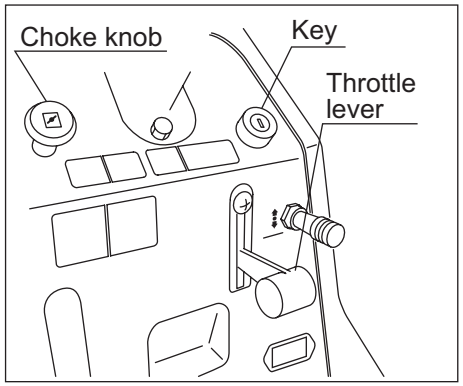

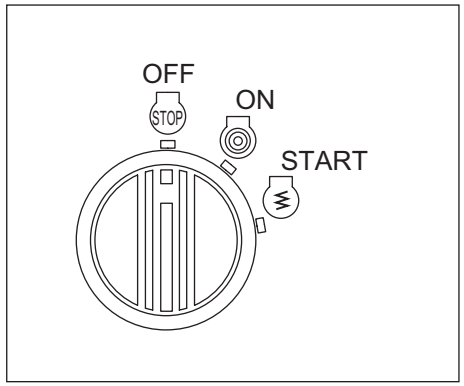

3-2 Throttle lever

The engine speed increases as the throttle lever is pulled up (toward the HIGH position), and decreases as it is lowered (toward the LOW position).

* Factory setting for the maximum engine speed is 3,000 rpm.

3-3 Stopping the engine

● Engine stopping method

① Engage the parking brake.
② Reduce the engine speed by lowering the throttle lever to the LOW position.
③ Turn the key counterclockwise to the OFF position to turn the machine off.

3-4 Precautions when leaving the machine

⚠Caution

1) Stop the machine on a level surface area and engage the parking brake.
2) Lower the rake completely.
3) Stop the engine.
4) Remove the ignition key.
5) Park the machine using wheel chocks.

⚠Caution

● Do not park on a slope.

3-5 Safety device

- The interlock system stops the engine if the operator leaves the seat without engaging the parking brake.
- The interlock system stops the engine if either the forward or the reverse pedal is pressed after the operator has left the seat with the parking brake engaged while the engine still running.
- The interlock system sounds a buzzer (intermittent sound) if the operator presses either the forward or the reverse pedal while seated in the seat with the parking brake engaged.

4. Travelling method

4-1 Operation of the forward/reverse pedals

The forward and reverse pedals are located to the right of the front cover. You can operate the machine at a constant speed by placing your foot on the footrest.

⚠Caution
- Do not operate the machine while the parking brake is engaged. If the operator presses either the forward or the reverse pedal while the parking brake is engaged, the interlock system sounds a buzzer (intermittent sound).

- ○ To move forward ····· Slowly press down on the forward pedal.
- ○ To move backward ····· Slowly press down on the reverse pedal.
- ○ To stop ····· Lift your foot off the pedal.

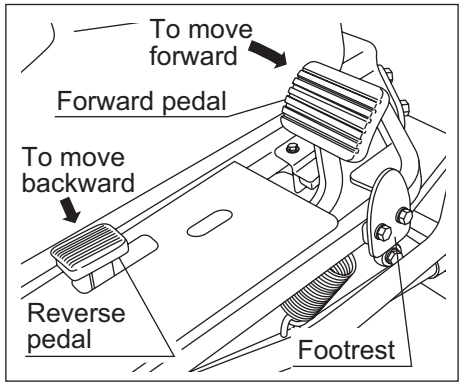

4-2 Bringing the machine to a stop

① You can bring the machine to a stop by releasing the forward/reverse pedals.
② If performing the action described in ① does not bring the machine to a stop, stop the machine by pressing the brake pedal.

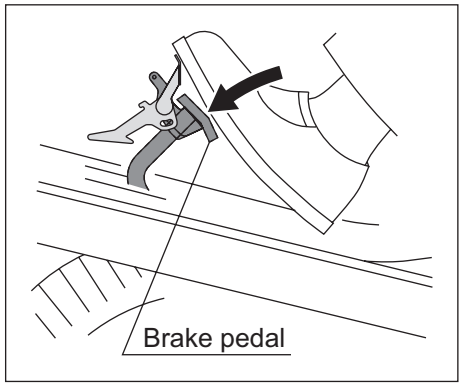

4-3 Operation of the parking brake

The parking brake is located to the left of the front cover.

⚠Caution
- Before leaving the operator's seat, park the machine on a flat, stable area and be sure to engage the parking brake.

● **Engaging the parking brake**
① Press only the parking brake pedal firmly.
② Press the lock pedal with the tip of your shoe.
③ Release the parking brake pedal while continuing to press down on the lock pedal.
④ The parking brake pedal will be locked in position and the brake will be engaged.

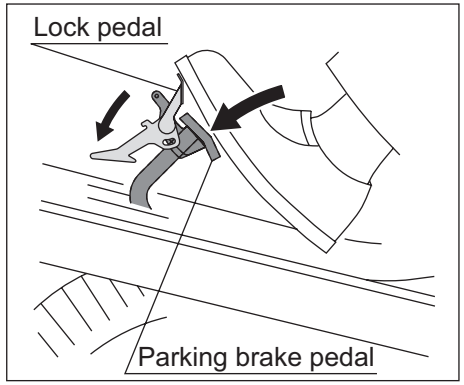

● **Releasing the parking brake**
① Press only the parking brake pedal.
② This releases the lock pedal, which in turn releases the parking brake.

4-4 Operation of the 2WD-3WD changeover lever

The 2WD-3WD changeover lever is located to the right of the seat.

Warning
- Before changing between two- and three-wheel drive, park the machine completely.

Caution
- Use the 2WD setting for blade operation. If you use the 3WD setting, the front wheel will slip.

● 2WD-3WD changeover operation method
- ○ 2WD·····Push the changeover lever forward to the 2WD setting.
- ○ 3WD·····Pull the changeover lever backward to the 3WD setting.

● Comparison of the advantages of 2WD and 3WD
- ○ 2WD
  - ● High speed travelling (about 16 km/h (13.9 mph) max.).
  - ● Smooth blade operation
- ○ 3WD
  - ● Excellent for sharp turns in steeply inclined bunkers
  - ● Excellent for sharp turns in soft bunkers

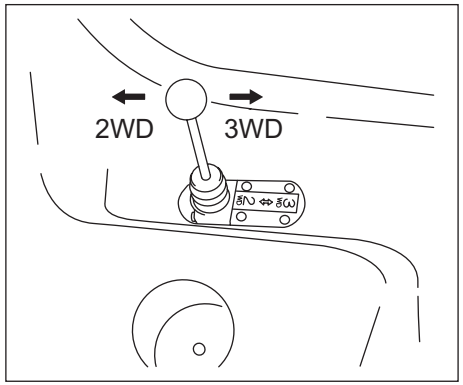

5. Machine operation methods

5-1 Operation of the rake

● Entering or leaving a bunker via a steep slope or bumpy ground may cause the frame or the cultivator to run along the ground, preventing the machine from traveling and/or damaging the grass.

Caution (General operation)
- For safety reasons, make sure that there are no people or obstacles near the rake before raising or lowering it.
- Do not reverse the machine while the rake is down. Failure to follow this precaution will result in damage to the rake.
- High speed operation of the machine is likely to leave tire marks or wave forms on the ground surface. Operate the machine at an appropriate speed.
- If the 3WD setting is used when operating the blade, the front wheel will slip. Therefore, you should always switch to 2WD for this operation.

- If the engine is running at a low speed, there will be insufficient hydraulic oil to raise or lower the rake. Therefore, the throttle lever should be moved to above the intermediate position for this operation.

● Rake raise/lower operation method
- ○ To raise the rake····· Push the raise/lower switch lever upward.
- ○ To lower the rake····· Push the raise/lower switch lever downward.

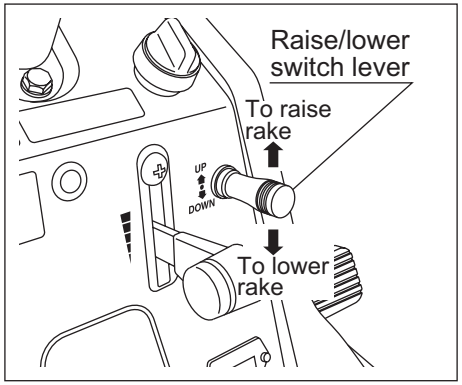

5-2 Operation of the brush

- **The brush is used to provide the bunker with a smoother finish.**

● Brush lever operation method

○ To lower the brush·····Pull the brush lever down toward the brush.

○ To raise the brush·····Push the brush lever back toward the machine.

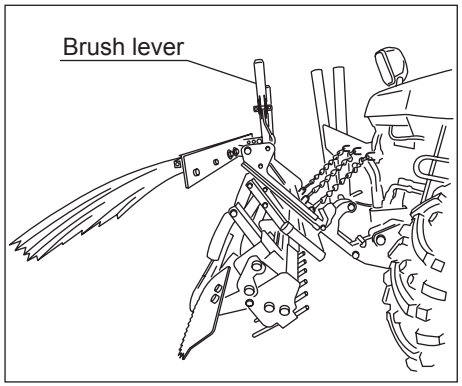

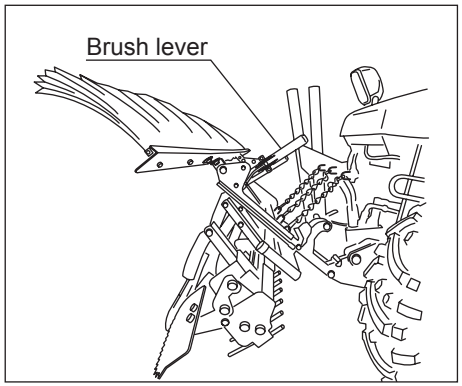

Adjust the height of the brush from the ground to suit the bunker conditions.

The height of the brush from the ground can be adjusted to the 4 positions shown in the following figures.

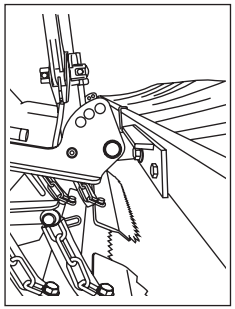

Pin position: Lowest

Travel

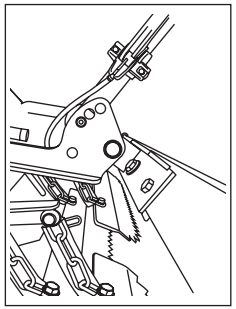

Pin position: Second from bottom

Light finishing

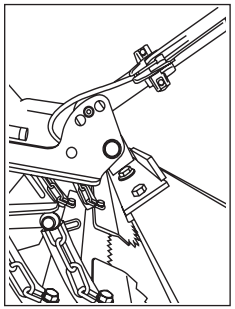

Pin position: Third from bottom

Medium finishing (Normal use)

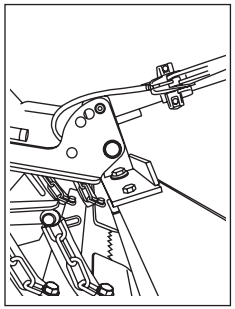

Pin position: Highest

Heavy finishing

5-3 Operation of the blade

⚠Caution

- For safety reasons, make sure that there are no people or obstacles near the blade before raising or lowering it.
- Do not operate the blade while the rake is down. Failure to follow this precaution will result in damage to the rake if the machine is reversed.
- If the 3WD setting is used when operating the blade, the front wheel will slip. Therefore, you should always switch to 2WD for this operation.

- In order to create a beautiful surface, lift the sand using the blade and then reverse the machine while pressing the raised sand down with the blade.

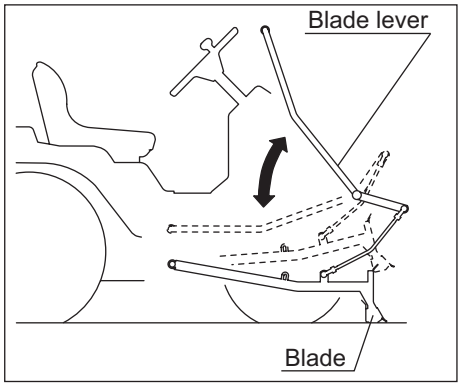

● Blade lever operation method

○ To lower the blade
·····Push the blade lever forward.

○ To raise the blade
·····Pull the blade lever toward you and lower it to its resting position.

5-4 Operation of the cultivator

● **Entering or leaving a bunker via a steep slope or bumpy ground may cause the cultivator to run along the ground, preventing the machine from traveling and/or damaging the grass.**

The cultivator loosens the hard, tightly packed surface of the bunker to create soft sand.

● **Cultivator operation method**

○ Lowering the cultivator board.

① Squeeze the clutch lever.

② Pull the cultivator lever in direction A while squeezing the clutch lever to lower the cultivator board.

③ Move the cultivator board to the desired position and then release the clutch lever.

④ The operation depth is fixed.

○ Raising the cultivator board

① Squeeze the clutch lever.

② Push the cultivator lever in direction B as far as it will go while squeezing the clutch lever and then release the clutch lever.

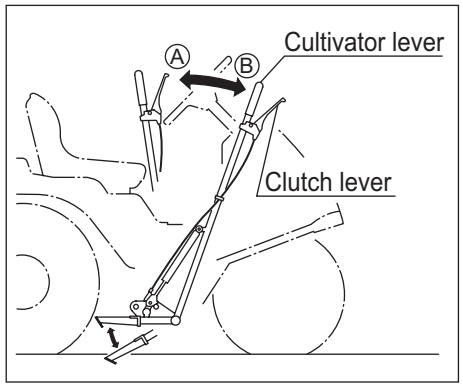

5-5 Headlight switch

The headlights are on when the switch is up and off when it is down. (The front and rear headlights work in tandem.)

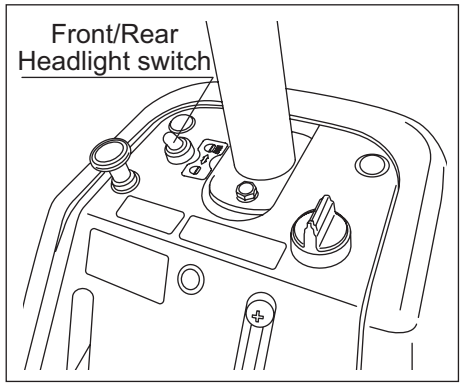

⚠Warning ● The headlights provide supplementary lighting only. Do not drive or operate the machine at night or in poor visibility.

5-6 Cargo box

Use the cargo box located behind the seat to carry any cargo.
The weight of the cargo should not exceed 20 kg.
When refueling, unfasten the two rubber straps and lift the cargo box in the direction of the arrow.

⚠Caution
- Be sure to carry any cargo only in the cargo box.
- When carrying loose items, secure them in place using the lock fittings and securely fasten the rubber straps.

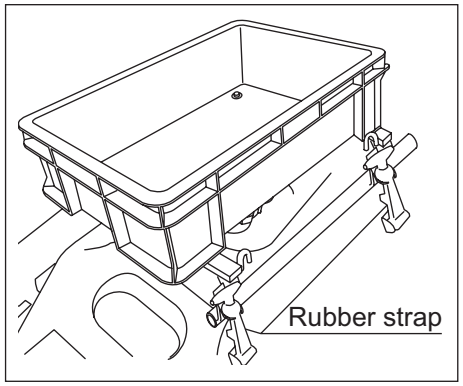

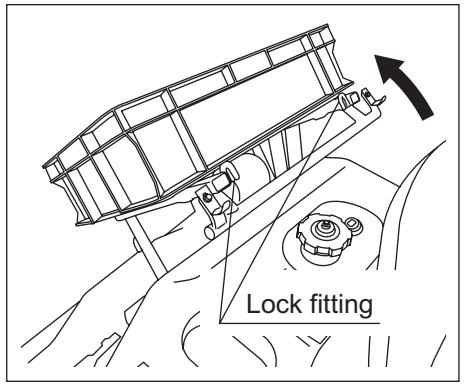

6. Maintenance

6-1 Opening and closing the cover

Caution
- Do not open the cover in places exposed to strong wind.
- When closing the cover, be careful not to get your hand caught.

● Opening and closing the front cover

- Remove the dimple knobs on each side and then pull the front cover forward until the wire is fully stretched.

● Opening and closing the rear cover

- Release the cover fastener and lift the rear cover until it comes into contact with the stopper. When closing the rear cover, lower it back into place slowly while supporting it with your hands and then re-engage the cover fastener.

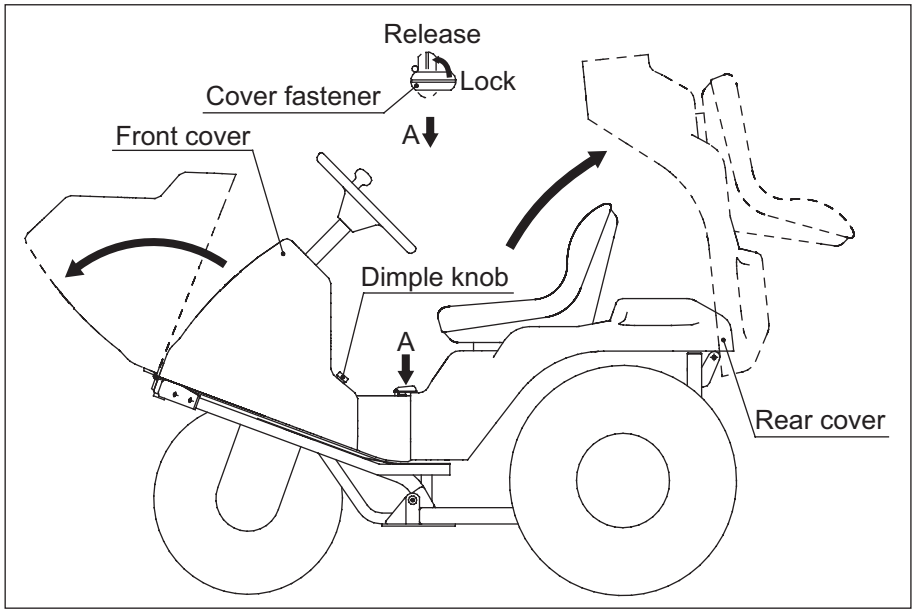

6-2 Oiling of each part

- Apply grease to the grease nipples located in the following places every 50 hours.

Part	Number of points to be greased
Support point for forward/ reverse pedals	1
Support point for brake pedal	1
Support point for belt tension lever	1
Support point for pump neutral lever	1
Rhombic flange unit of front wheel	2 (2WD) 1 (3WD)
Support point for rear wheel brake lever	2
Support point for blade lever	1

6-3 Adjustment of the steering chain tension

① Open the front cover.

② Adjust the chain tension to an appropriate level (until almost all looseness is eliminated, but not excessively tight) using the nuts attached to either end of the steering chain. After completing the adjustment, be sure to lock the nuts.

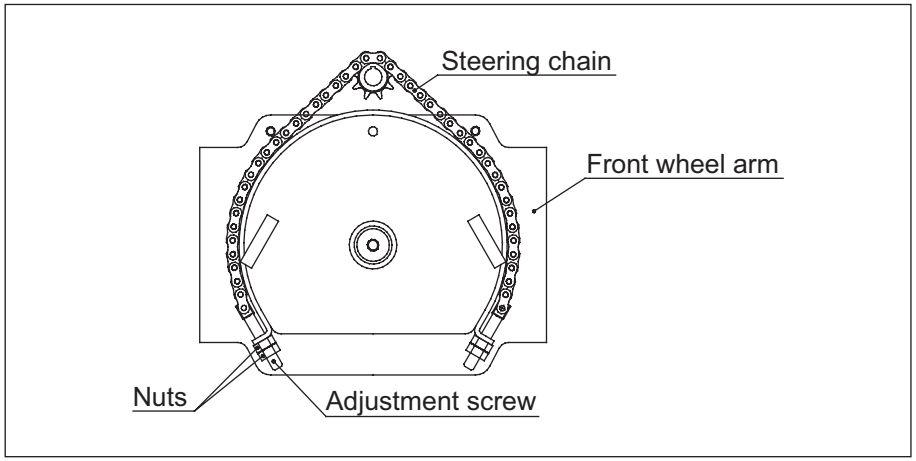

6-4 Adjustment of the brake

Adjust the brake by tightening the brake wire adjuster bolts and the spring rod.

1. Adjustment of the brake wire adjuster bolts

- Adjust the pull length for the brake lever by adjusting the brake wire adjuster bolts. Adjust it so that the brake lever has as little play as possible and the brake does not make any noise when it is released.
- ○ If the brake lever has a lot of play ·····The brake force is weakened and the brake pedal becomes lighter.
- ○ If the brake lever has only a little play ·····The brake force is increased and the brake pedal becomes heavier.

2. Adjustment of the spring rod

- The brake force and the operating force of the brake pedal can be adjusted by adjusting the nut on the spring rod.
- ○ If the nut is loosen ····· The brake force is weakened and the brake pedal becomes lighter.
- ○ If the nut is tightened ····· The brake force is increased and the brake pedal becomes heavier.
- ○ After the appropriate adjustment has been completed, tighten the lock nut securely.

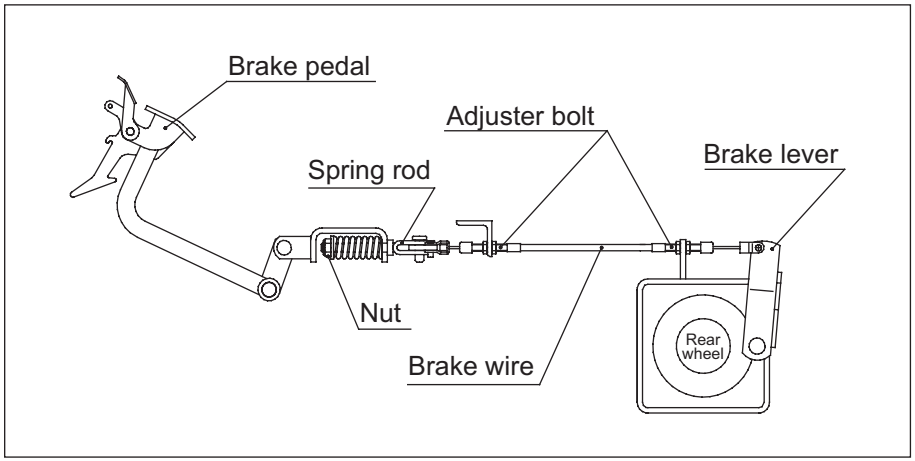

6-5 Adjustment of the belt tension

⚠Caution

- Before adjusting the belt tension, be sure to stop the engine.
- Before installing the belt, remove the high nut to loosen the belt tension completely. In doing this, be careful not to get your fingers caught between the belt and the pulley.

⚠Caution

- The muffler of the engine is near the belt. Make sure that the muffler has cooled sufficiently before adjusting the belt tension.

- To adjust the belt tension, tighten the high nut until no gap remains between the spring cover and the tension support, then lock it in place with the nut. If the tension is loosened by use of the machine, a gap will appear. If this happens, readjust the belt tension.

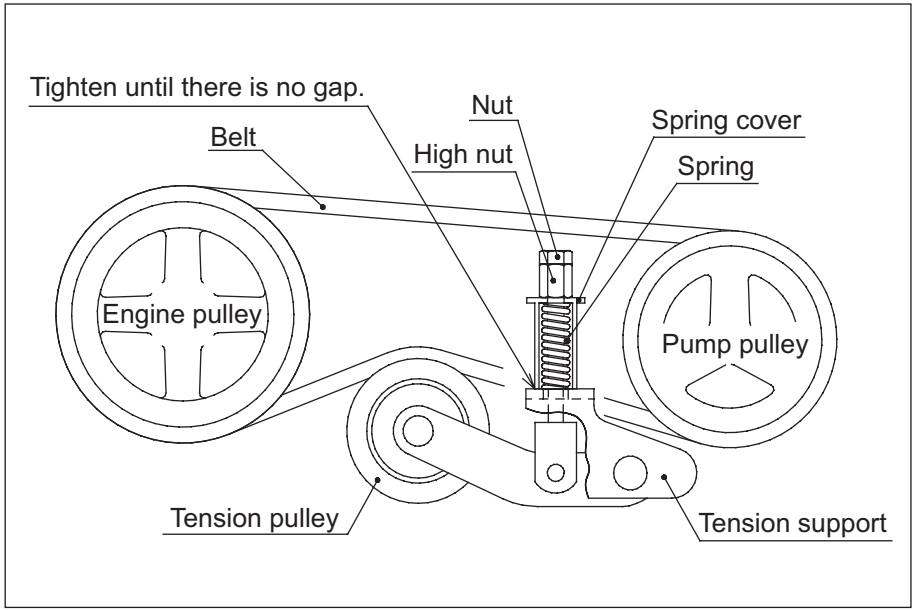

6-6 Finding the neutral position of the piston pump

If the machine moves forward or backward with no pressure being applied to either the forward or the reverse pedal, the piston pump is not in its neutral position. Adjust the position by performing the following steps.

1. Jack up the machine, place it on a stable stand, and then raise the front and rear wheels.
2. Start the engine and lift the throttle lever to the maximum speed setting. (If the machine is set to 3WD, push the 2WD-3WD changeover lever forward to the 2WD setting.)
3. Turn the camshaft slowly until the rear wheels stop. Lock the camshaft securely in place with the nut when the rear wheels stop.

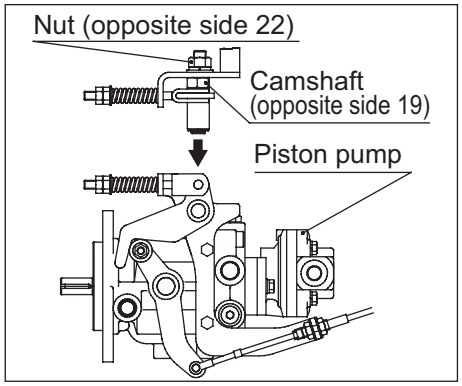

6-7 Replacement of the fuel filter

Replace the fuel filter every year or when the fuel no longer flows smoothly. Install a replacement filter with the direction arrow on it pointing toward the engine.

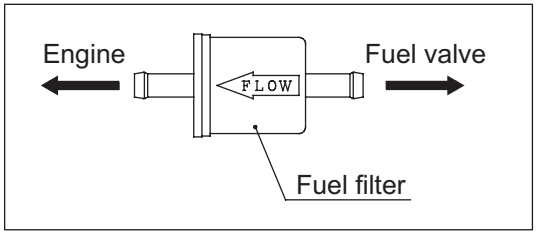

6-8 Replacement of the engine oil and the filter

The hour meter shows the total number of hours the engine has been in operation.
Carry out periodic inspections and maintenance based on the number of operating hours.

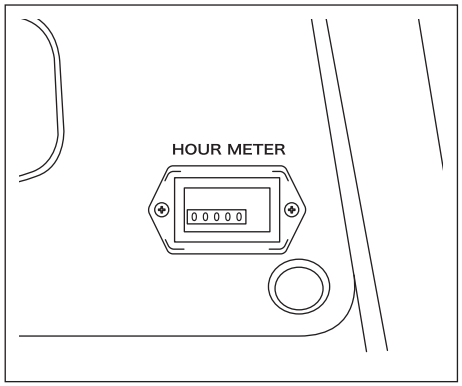

For more details, refer to the owner's manual for the engine.

Replacement of the engine oil	1st replacement	After 8 operating hours
	2nd and subsequent replacements	Every 50 operating hours
Replacement of the oil filter	Every 100 operating hours or at the beginning of each season	
Engine oil quantity	If only the oil is replaced	Approx. 1.0 to 1.2 L
	If the oil and the filter are both replaced	Approx. 1.6 L
Engine oil viscosity	Normal (outdoor air temperature is 4°C (39.2°F) or higher)	SAE 30
	Winter (outdoor air temperature is 4°C (39.2°F) or lower)	SAE 20
Engine oil grade	Grades higher than the following API service grades: SF, SG, SH, and SJ	

● Replacement of the engine oil

1. Stop the engine on a level area. While the engine oil is warm, remove the drain plug to drain the engine oil.
2. Reattach the drain plug and remove the dipstick.
3. Pour the engine oil in through the oil filler hole until the oil level reaches a point between the upper and lower limits on the dipstick.

⚠Caution

- Use extra care when replacing the engine oil. Should hot oil come into contact with your skin, you may suffer burns.

⚠Caution

- After the engine oil has been replaced, be sure to check whether the oil level is at the specified level on the dipstick (i.e. between the upper and lower limits).
- Screw the dipstick and the cap for the oil filler hole securely in place. Failure to screw them in place securely or a defective seal may cause an oil leak in the combustion chamber as negative pressure cannot be maintained in the crankcase, resulting in the emission of white smoke.

● **Replacement of the engine oil filter**

1. Remove the old oil filter.
2. Apply a thin layer of engine oil to the gasket of the new oil filter and screw in the oil filter until its gasket comes into contact with the adapter. Using a wrench, turn it further 180 to 270 degrees to secure it in place.
   (* By using the optional oil filter wrench (Catalogue No. 16-5), you can replace the oil filter without lowering the engine.)

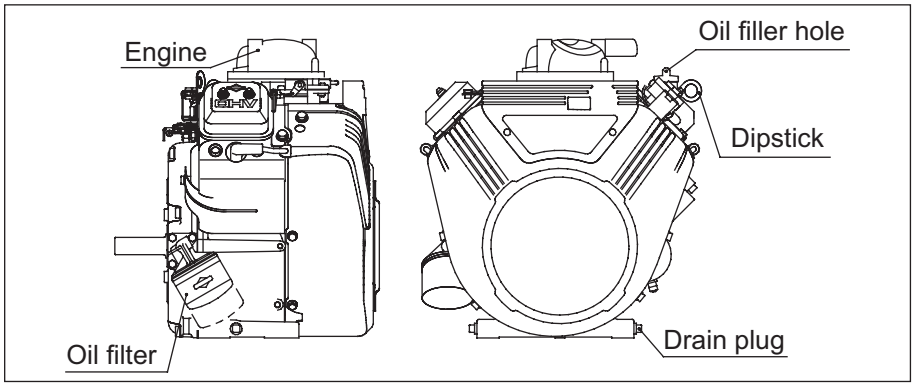

6-9 Replacement of the hydraulic oil and the cartridge filter

- Contaminated hydraulic oil will cause the hydraulic equipment to fail. Replace the hydraulic oil and the cartridge filter periodically.

Replacement of the hydraulic oil	1st replacement	After 100 operating hours
	2nd or subsequent replacement	Every 500 operating hours
Replacement of the cartridge filter	1st replacement	After 100 operating hours
	2nd or subsequent replacement	Every 250 operating hours
Designated hydraulic oil	Shell Tellus 46 hydraulic oil or equivalent	
Oil tank capacity	Approx. 15 L	

● **Replacement of the hydraulic oil**

⚠Caution
- Drain and replace the hydraulic oil immediately if you notice that it is emulsifying or that there is a lack of transparency.

1. Remove the drain plug from the oil tank in a level area to drain the old hydraulic oil.
2. Reattach the drain plug and pour new hydraulic oil in through the oil filler hole until the oil level reaches the center of the oil level gauge on the hydraulic tank.
3. After performing a few simple driving maneuvers and raising/lowering the rake, check whether the oil level is in the center of the oil level gauge. If there is insufficient oil level, add more.

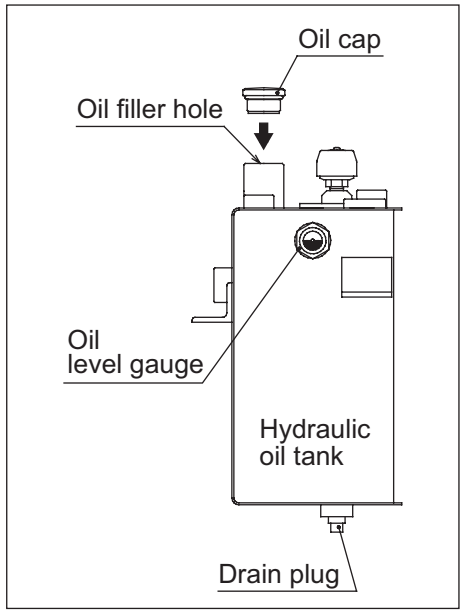

⚠Caution
- The hydraulic oil is extremely hot immediately after the machine has been in operation for a long period of time. To avoid burns, wait a short while before removing the drain plug to change the oil.

● **Replacement of the cartridge filter**

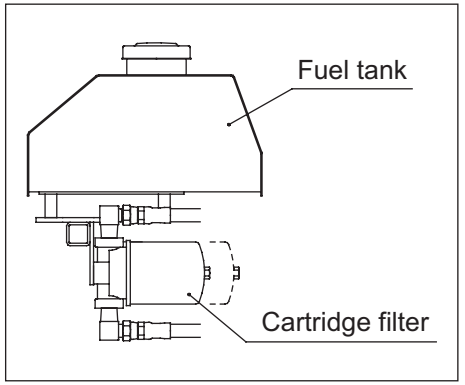

6-10 Inspection of parts for oil leaks

Parts such as hydraulic hose fittings, pump, and cylinder may become loose after approximately 50 hours of operation. These parts should be securely fastened to prevent oil leakages.

6-11 Replacement of fuses

Caution

- If the fuse has blown, there may have been a short circuit in the electrical circuitry. Investigate possible causes such as a terminal connection failure, damaged wires/ terminals, and incorrect wiring.

Warning

- Make sure you disconnect the negative (-) battery cable before performing maintenance on the electrical circuitry.

Designated fuse	Glass fuse: 20 A (φ6.4×30 mm)

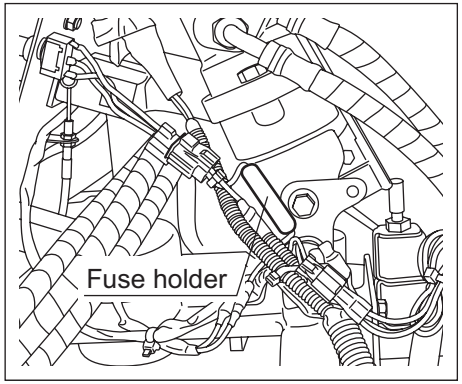

6-12 Inspection of the electric wiring

Warning

- A short circuit in the electric wiring may cause a fire, electricity leakage, or electrical equipment failure. If a terminal connection has failed, the wiring or a terminal has been damaged, or aging has resulted in damage to the wiring, repair or replace these parts immediately.
- Make sure you disconnect the negative (-) battery cable before performing maintenance on the electrical circuitry.

6-13 Inspection of the battery

Refer to the instruction manual for the battery.

Having cleaned a section around the level lines with a damp cloth, check whether the electrolyte level is between “UPPER” (maximum level line) and “LOWER” (minimum level line) limits.
If the electrolyte level has fallen to less than halfway between the “UPPER” and “LOWER” limits, add distilled water to the battery immediately until the “UPPER” limit is reached.

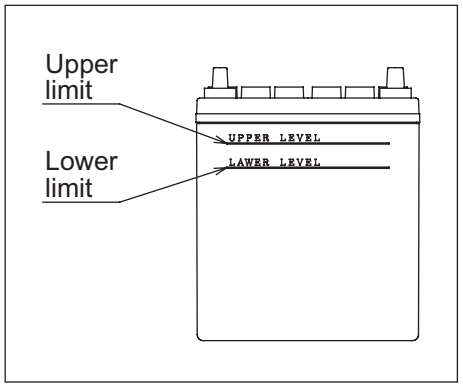

Danger

- Do not drink the electrolyte and avoid contact with skin, eyes, or clothing. Wear protective glasses and protective clothes.
- The use of fire is strictly prohibited when inspecting or charging the battery. The electrolyte is diluted sulfuric acid so do not let it come into contact with your skin or the machine. Should it come into contact with your skin or clothes, immediately wash the affected area with water and seek treatment from a doctor, particularly if it has come into contact with your eyes or you have swallowed it.
- Never smoke near the battery and keep sparks and flames away from it.
- To disconnect the battery, remove the negative (-) battery cable first and the positive (+) battery cable last. To connect the battery, attach the positive (+) cable first. If these steps are performed in the opposite order, bringing an item such as a tool into contact with the machine may cause a short circuit, which may result in a spark.
- When connecting the battery cables, make sure that you connect the positive and negative terminals correctly. If you fail to do so, the battery and the electrical equipment may be damaged. (The red cable should be connected to the positive terminal.)
- Using a dry cloth to clean the battery may cause static electricity to be generated, which may result in a fire or explosion.

● Inspection of the terminals for corrosion

- Check whether the terminals have corroded. If you notice any corrosion, after removing first the negative cable and then the positive cable, clean the corrosion from the terminals and clamps using a wire brush or other suitable cleaning instrument. Remove and replace them if necessary. After that, attach the positive cable first and then the negative cable, then apply Vaseline or another suitable lubricant.

6-14 Traction if the machine is unable to travel.

- If the machine is unable to travel due to a problem such as engine trouble, it can be moved by traction or manual pushing by performing the following steps.

1) If the engine is running, turn it off.
2) Apply the parking brake and attach the wheel chocks.

○ Push the operation pins (located in 2 places) of the unloading valve into the hydraulic pump by tightening the bolts. This will free the circuit inside the pump, enabling the machine to be moved by traction or manual pushing.

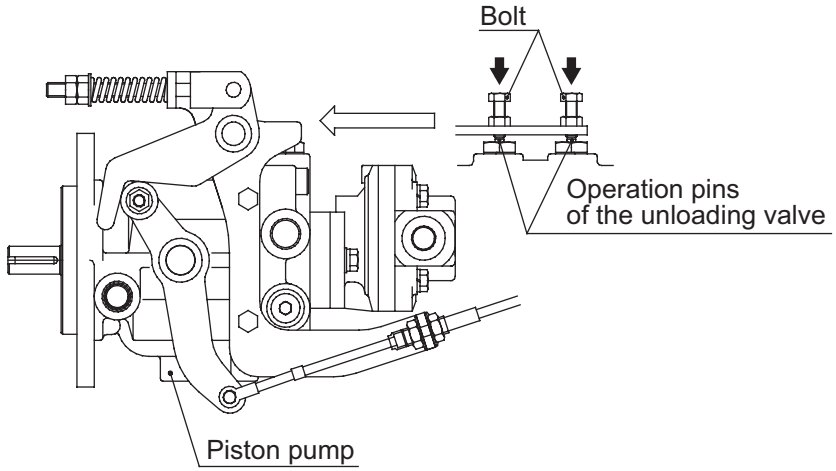

⚠Caution

- If you tow the machine, drive carefully at a low speed.
- When you next start the engine, be sure to release the unloading valve before doing so.

6-15 Maintenance schedule

	Maintenance items	Maintenance timing		Reference
Engine	Inspection of oil level	Before use		P.16 and owner's manual for the engine
	Change of engine oil	1st replacement	After 8 hours	P.26 and owner's manual for the engine
		2nd or subsequent replacement	Every 50 hours	
	Replacement of oil filter	Every 100 hours		P.27 and owner's manual for the engine
	Replacement of fuel filter	Every year		P.26 and owner's manual for the engine
	Replacement of spark plugs	Every 100 hours		Owner's manual for the engine
	Inspection of valve clearance	Every year		Owner's manual for the engine
Machine body	Cleaning of air filter	Before use		P.16
	Replacement of air filter element	Every 200 hours		P.16
	Replacement of hydraulic oil	1st replacement	After 100 hours	P.27
		2nd or subsequent replacement	Every 500 hours	
	Replacement of cartridge filter	1st replacement	After 100 hours	P.27
		2nd or subsequent replacement	Every 250 hours	
	Inspection of belt	Before use		P.16, P.25
	Application of grease	Every 50 hours		P.24
	Inspection of hydraulic hose	Before use		P.16
	Replacement of hydraulic hose	Every 4 years		P.16
	Inspection of tires	Before use		P.17
	Inspection of brake	Before use		P.17, P.25
	Adjustment of steering chain	Every 25 hours		P.17, P.24
	Inspection of battery electrolyte	Every 25 hours		P.28 and instruction manual for the battery
	Inspection of fastening of each part	Before use		P.18
	Inspection of parts for oil leaks	Before use		P.16

⚠Caution

- Perform maintenance earlier than stipulated above if necessary.
- Use tools appropriate to the task to be performed.

7. Long-term storage

- **Refer to their respective operation manuals for a more detailed explanation of how to store the engine and battery for extended periods of time.**

○ Completely remove all mud, grass, and oil from the engine and battery.
○ Inspect and replace the engine oil and filter element.
○ Refill with oil and apply lubrication/grease to all parts that require lubrication.
○ Drain the fuel from the fuel tank.
○ Set the air pressure in the tires to slightly higher level than normal and place the machine on a board to avoid humidity.
○ Tighten all bolts, nuts, and screws and make sure none are missing. If any are worn or damaged, replace them.
○ Repair or replace damaged parts and peeling paint.
○ Store the machine in a place that is dry and free from rain.
○ Remove the battery from the machine. If you choose to leave the battery installed in the machine, disconnect the grounding side (negative side).

8. Disposal

Dispose of items in accordance with the laws of your country.
(E.g. waste oil, rubber products, parts, batteries, and wires.)

9. Electric wiring diagram

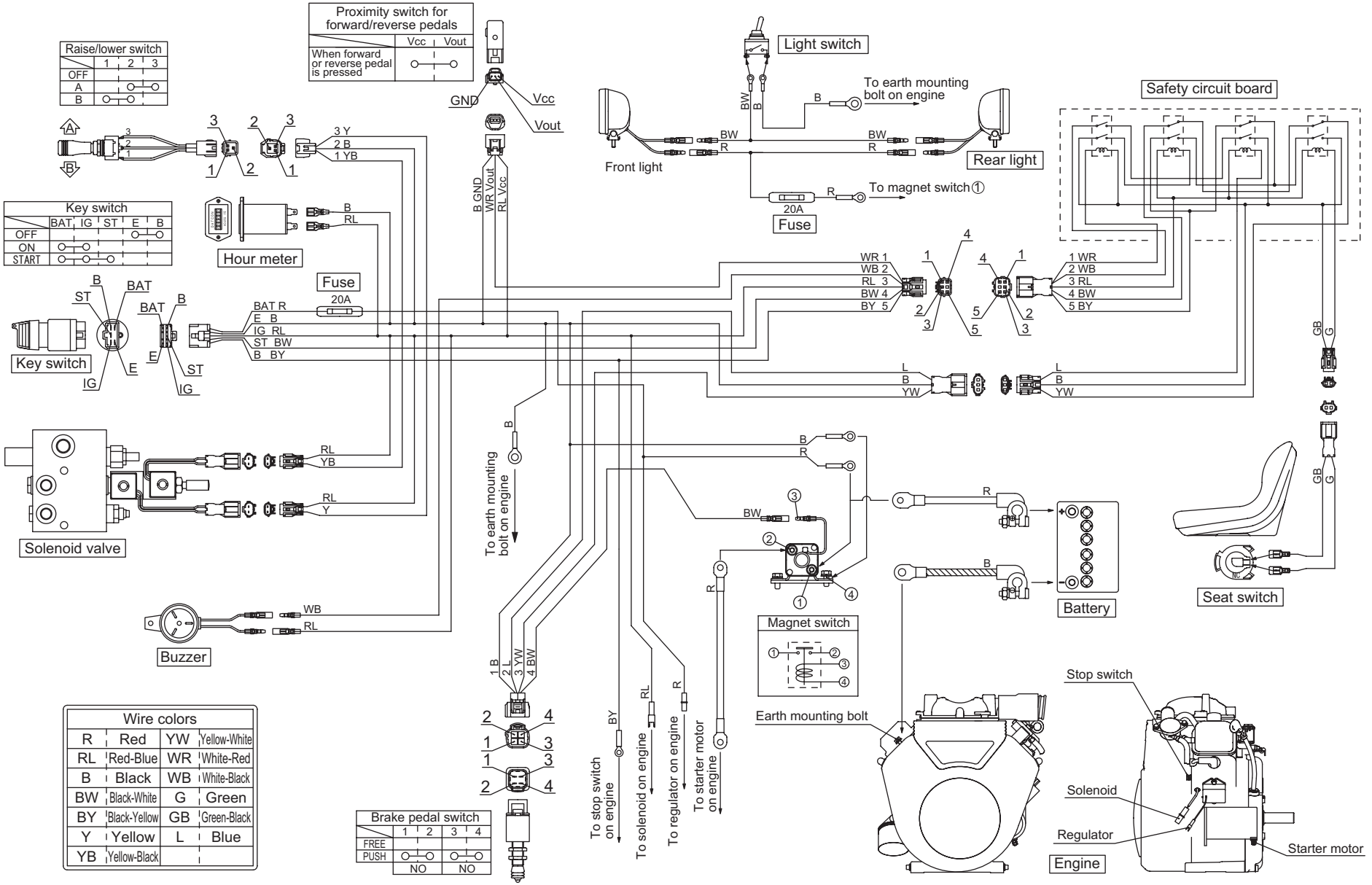

10. Hydraulic circuit diagram

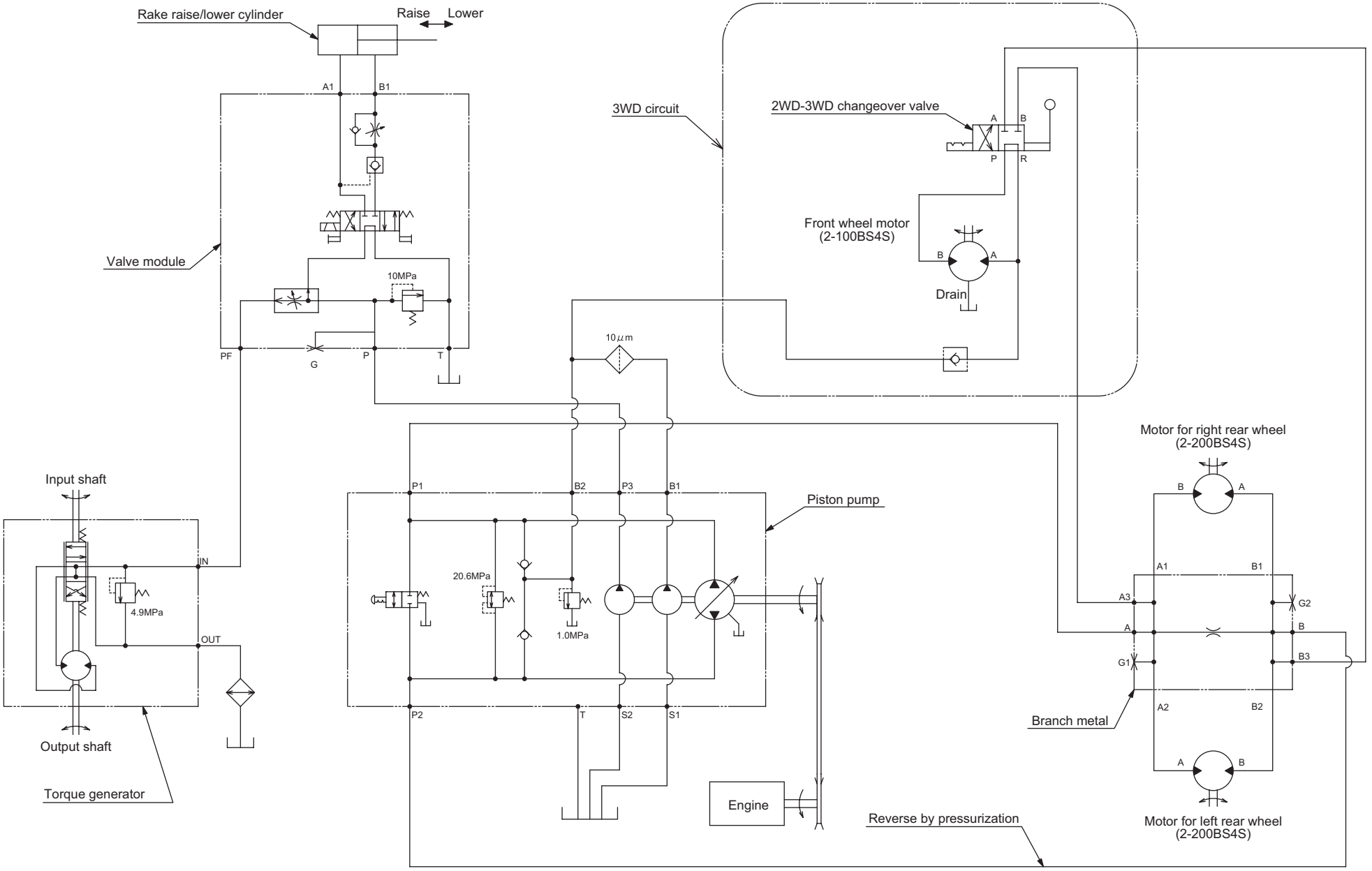

Port name for each hydraulic device

Torque generator

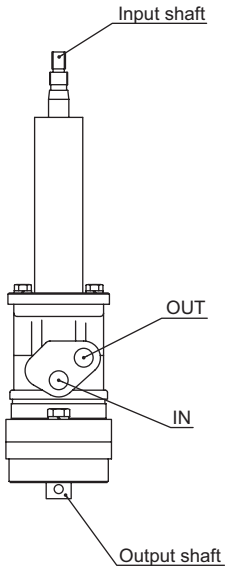

Piston pump

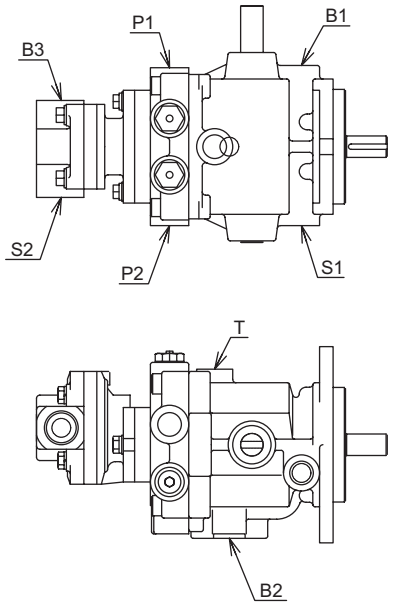

Front wheel motor

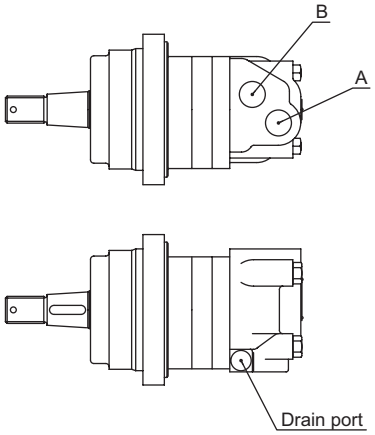

2WD-3WD changeover valve

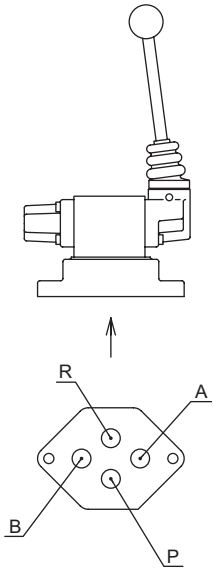

Valve module

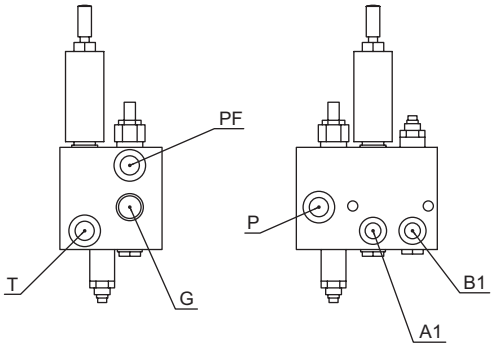

Motor for left rear wheel

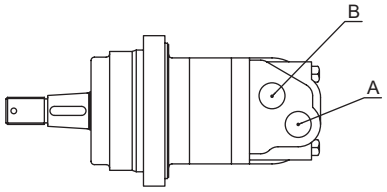

Branch metal

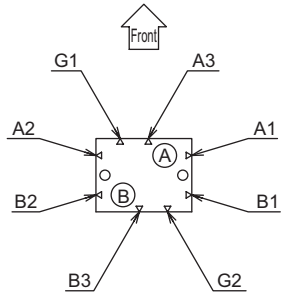

Motor for right rear wheel

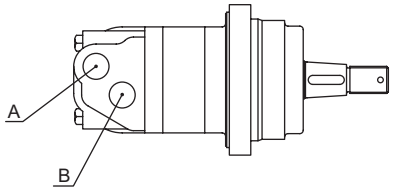

EC Declaration of Conformity

We

Manufacture's Name:	Kyoeisha Co., Ltd.
Manufacture's Address:	1-26 Miyuki-cho, Toyokawa, Aichi-pref. 442-8530 Japan

declare that

Product:	Bunker rake
Make:	BARONESS
Type:	SP05
Starting Serial No.:	10151

compiler of the technical file

Name:	Kyoeisha U.K.Ltd.
Address:	Unit 5 Hatch Industrial Park Grewell Road,Basingstke Hampshire RG24 7NG, the United Kingdom

in accordance with the following Directives :

2006/42/EC	The Machinery Directive and its amending directives

has been designed and manufactured using the following specifications :

ISO12100-1 : 2003
ISO12100-2 : 2003
EN836 : 1997
ISO5395 : 1990

References of other Community Directives applied
2000/14/EC 、 2004/108/EC

Place: Japan
Date : January 6 2010

Signature : M. Nakazawa
Name : Masahisa Nakazawa
Position : Quality Dept. Manager

Manufacturer's Declaration of Conformity for

Product Identification

Product :	Bunker rake
Make :	BARONESS
Type :	SP05
Version(s) :	Not Applicable
Starting Serial No. :	10151
Measured Sound Power Level :	LWA 94.16 dB
Guaranteed Sound Power Level :	LWA 98 dB
Manufacturer	
Name :	Kyoeisha Co., Ltd.
Address :	1-26 Miyuki-cho, Toyokawa, Aichi-pref., Japan

Technical Documentation

Keeper's Name :	Kyoeisha U.K. Ltd.
Keeper's Address :	Unit 5 Hatch Industrial Park Greywell Road, Basingstoke Hampshire RG24 7NG, the United Kingdom

Conformity Assessment Procedure : Internal Control of Production with Assessment of Technical Documentation and Periodical Checking (Annex V) of 2000/14/EC-2005/88/EC

Technical Construction File

Date :	December 1.2009
Technical Construction File No. :	TCSP05-00

Means of conformity

The product is in conformity with the Directive relating to the noise emission in the environment by equipment for use outdoors 2000/14/EC-2005/88/EC.

References of other Community Directives applied

2006/42/EC , 2004/108/EC

Signature : M. Nakazawa

Masahisa Nakazawa
Manager
Quality Dept.
Kyoeisha Co., Ltd.

Date : December 1.2009

KYOEISHA CO.,LTD.

Head Office 1-26, Miyuki-cho, Toyokawa,
Aichi-Pref. 442-8530 Japan.

BARONESS
Turf Care Machinery
Tel: (0533) 84-1390
Fax: (0533) 89-3623

SP05-UM--GBZ/10G-00-S.K